MISSOURI HIGHWAY AND TRANSPORTATION COMMISSION

STATE	PROJ. NO.	SHEET NO.
MO.		298
SEC./SUR. 33 TWP. 48N RGE. 38W		

WIDEN AND REDECK EXISTING SPANS
(112'–145'–145'–112') CONT.COMP. PLATE GDR. SPANS
– 4.0 % GRADE

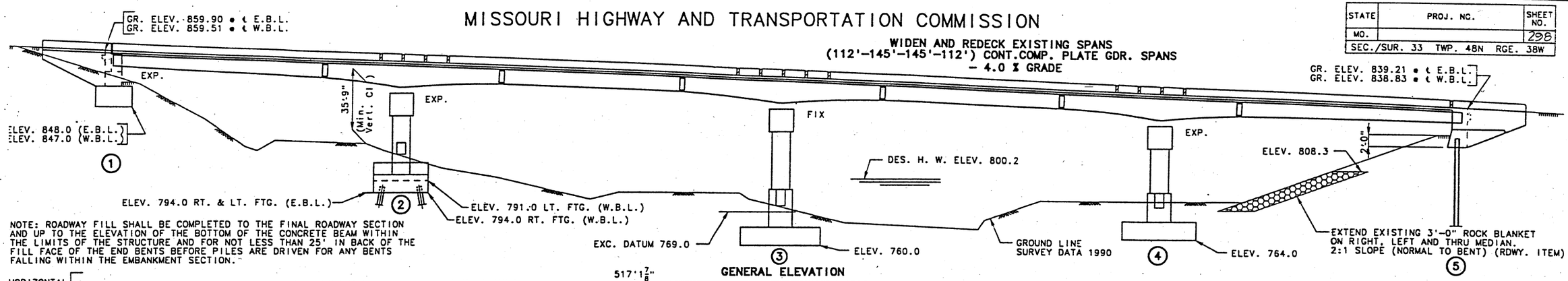

NOTE: ROADWAY FILL SHALL BE COMPLETED TO THE FINAL ROADWAY SECTION AND UP TO THE ELEVATION OF THE BOTTOM OF THE CONCRETE BEAM WITHIN THE LIMITS OF THE STRUCTURE AND FOR NOT LESS THAN 25' IN BACK OF THE FILL FACE OF THE END BENTS BEFORE PILES ARE DRIVEN FOR ANY BENTS FALLING WITHIN THE EMBANKMENT SECTION.

GENERAL ELEVATION

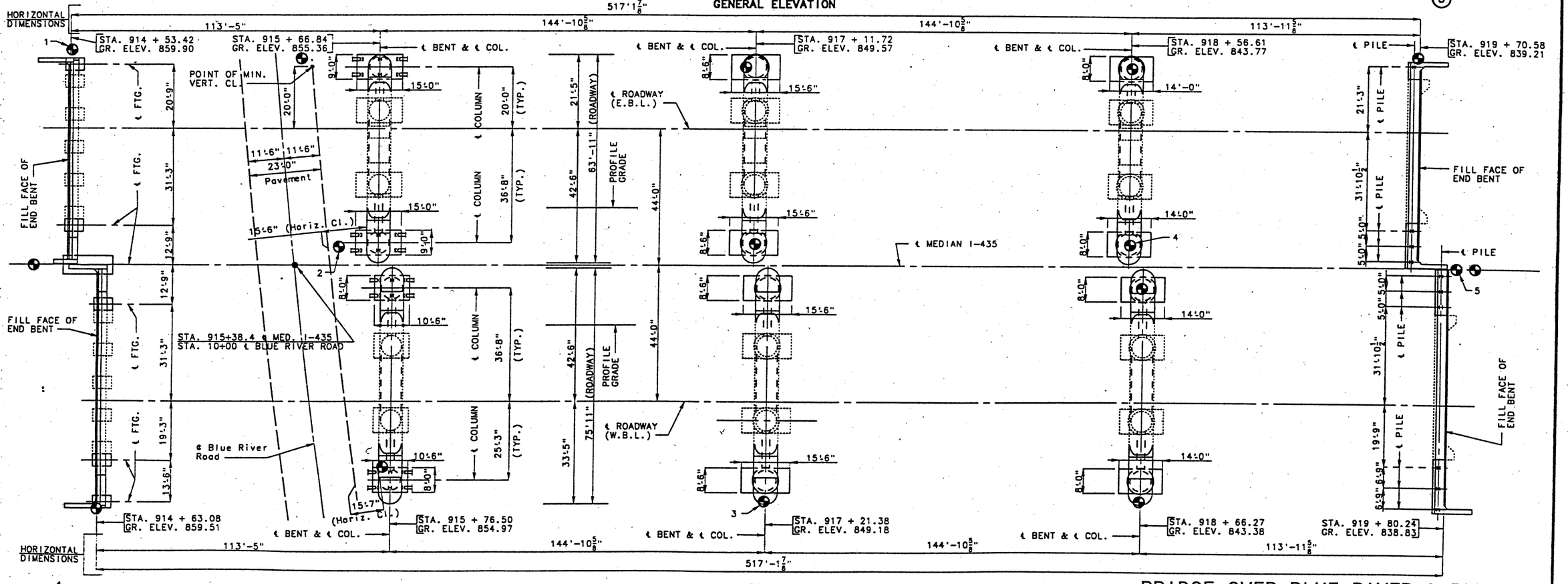

PLAN

B.M. ELEV. 860.63 P.-K. NAIL IN BR. CURB ● N.E. COR. E.B.L. BR. A-610

● INDICATES LOCATION OF BORINGS.

NOTE: FOR GENERAL NOTES, ESTIMATED QUANTITIES, HYDROLOGIC DATA AND PILE AND FOOTING DATA SEE SHEET NO. 2.

NOTE AND DISCLAIMER REGARDING BORING LOG DATA

THE LOCATIONS OF ALL SUBSURFACE BORING FOR THIS STRUCTURE ARE SHOWN ON THE BRIDGE PLAN SHEET FOR THIS STRUCTURE. BORING DATA FOR THE NUMBERED LOCATIONS IS SHOWN ON SHEET NO. 2. THE BORING DATA FOR ALL LOCATIONS INDICATED, AS WELL AS ANY OTHER BORING LOGS OR OTHER FACTUAL RECORDS OF SUBSURFACE DATA AND INVESTIGATIONS PERFORMED BY THE DEPARTMENT FOR THE DESIGN OF THE PROJECT, IS AVAILABLE FROM THE DISTRICT MATERIALS ENGINEER UPON WRITTEN REQUEST AS OUTLINED IN THE PROJECT SPECIAL PROVISIONS. NO GREATER SIGNIFICANCE OR WEIGHT SHOULD BE GIVEN TO THE BORING DATA DEPICTED ON THE PLAN SHEETS THAN TO SUBSURFACE DATA AVAILABLE FROM THE DISTRICT OR ELSEWHERE.

THE COMMISSION DOES NOT REPRESENT OR WARRANT THAT ANY SUCH BORING DATA ACCURATELY DEPICTS THE CONDITIONS TO BE ENCOUNTERED IN CONSTRUCTING THIS PROJECT. A CONTRACTOR ASSUMES ALL RISKS IT MAY ENCOUNTER IN BASING ITS BID PRICES, TIME OR SCHEDULE OF PERFORMANCE ON THE BORING DATA DEPICTED HERE OR THOSE AVAILABLE FROM THE DISTRICT, OR ON ANY OTHER DOCUMENTATION NOT EXPRESSLY WARRANTED, WHICH THE CONTRACTOR MAY OBTAIN FROM THE COMMISSION.

NOTE: THIS DRAWING IS NOT TO SCALE. FOLLOW DIMENSIONS.

DESIGNED FEB. 1993
DETAILED AUG. 1993
CHECKED AUG. 1993

SHEET NO. 1 OF 5:.

BRIDGE OVER BLUE RIVER & BLUE RIVER ROAD

STATE ROAD: INTERSTATE RTE. I-435
ABOUT 1.5 MILES WEST OF RTE. 71
PROJECT NO. STA. 914+63.08
JOB NO. J410807 RTE. I-435
JACKSON COUNTY

DATE 2/28/94

STD.
STD. 706.35
A-610R1

STATE	PROJ. NO.	SHEET NO.
MO.		55

299

GENERAL NOTES:

DESIGN SPECIFICATIONS: A.A.S.H.T.O.-1992
LOAD FACTOR DESIGN.
SEISMIC PERFORMANCE CATEGORY A.

DESIGN LOADING:
HS20-44 MODIFIED 24,000# TANDEM AXLE
NO FUTURE WEARING SURFACE
EARTH 120#/CU. FT., EQUIVALENT FLUID PRESSURE 45#/CU. FT.
FATIGUE STRESS - CASE I.

DESIGN UNIT STRESSES:
CLASS B CONCRETE (SUBSTRUCTURE) F'C=3,000 PSI.
CLASS B1 CONCRETE (SAFETY BARRIER CURB) F'C=4,000 PSI.
CLASS B2 CONCRETE (SUPERSTRUCTURE EXCEPT SAFETY BARRIER CURB) F'C=4,000 PSI.
REINFORCING STEEL (GRADE 60) FY=60,000 PSI.
STRUCTURAL CARBON STEEL FY=36,000 PSI.
STEEL PILE FB=9,000PSI.

STRUCTURAL STEEL:
FIELD CONNECTIONS, HIGH STRENGTH BOLTS 3/4"Ø, HOLES 13/16"Ø, EXCEPT AS NOTED.
HIGH STRENGTH BOLTS, NUTS AND WASHERS WILL BE SAMPLED FOR QUALITY ASSURANCE AS SPECIFIED IN STD. SPEC. 106 AND FIELD SECTION (F5-712).

REINFORCING STEEL:
MINIMUM CLEARANCE TO REINFORCING STEEL SHALL BE 1 1/2", UNLESS OTHERWISE SHOWN.
ALL REINFORCING BARS IN TOPS OF SUBSTRUCTURE BEAMS OR CAPS SHALL BE SPACED TO CLEAR ANCHOR BOLTS FOR BEARINGS BY AT LEAST 1/2".
BARS BONDED IN OLD CONCRETE NOT REMOVED SHALL BE CLEANLY STRIPPED AND EMBEDDED INTO NEW CONCRETE WHERE POSSIBLE. IF LENGTH IS AVAILABLE, OLD BARS SHALL EXTEND INTO NEW CONCRETE AT LEAST 40 DIAMETERS FOR SMOOTH BARS AND 30 DIAMETERS FOR DEFORMED BARS, UNLESS OTHERWISE NOTED.

PAINT:
PAINT NEW STRUCTURAL STEEL SYSTEM E SHOP COATS (GRAY) IN ACCORDANCE WITH SPECIAL PROVISIONS. NO FIELD PAINT EXCEPT FOR TOUCH UP.

AREAS TO BE ENCASED IN END BENT CONCRETE SHALL BE HAND CLEANED OF LOOSE RUST AND SCALE BEFORE CONCRETE IS POURED AND PAINTED WITH 1 COAT OF CALCIUM SULFONATE PRIMER. COST TO BE INCLUDED IN OTHER ITEMS.

JOINT FILLER:
ALL JOINT FILLER SHALL MEET THE REQUIREMENTS OF STD. SPEC. 1057.2.4, EXCEPT AS NOTED.

NOTE: OUTLINE OF OLD WORK IS INDICATED BY LIGHT DASHED LINES. HEAVY LINES INDICATE NEW WORK.
TRAFFIC OVER STRUCTURE TO BE MAINTAINED DURING CONSTRUCTION, SEE SHEET NO. 3.
CONTRACTOR SHALL VERIFY ALL DIMENSIONS IN FIELD BEFORE ORDERING NEW STEEL.

THE * DIAMETER RESIN ANCHOR SYSTEMS SHALL HAVE A MINIMUM ULTIMATE PULLOUT STRENGTH OF ** LBS. IN CONCRETE WITH FC'= 4000 PSI, SEE SPECIAL PROVISIONS.

* BAR SIZE	** PULLOUT
5/8"	15,500
3/4"	20,400
1"	33,600

HYDROLOGIC DATA	
DRAINAGE AREA	= 106.7 SQ. MI. (LT. HILLY)
DESIGN DISCHARGE	= 32,000 CFS (FEMA CURVES)
DESIGN HIGH WATER ELEVATION	= 800.2 (100 YEARS)
ESTIMATED BACKWATER	= 0.12 (FT.)

PILE & FOOTING DATA (E.B.L.)

	BENT NO.	1	2	3	4	5
BEARING PILE	PILE TYPE AND SIZE		HP12X53			HP10X42
	NUMBER		12			4
	APPROXIMATE LENGTH FT.		①			68
	DESIGN BEARING TONS					
	HAMMER ENERGY REQ'D FT.-LBS.					
SPREAD FOOTING	FOUNDATION MATERIAL	ROCK		SHALE		
	DESIGN BEARING TONS/SQ. FT.	5.5		6.0	6.0	

MINIMUM ENERGY REQUIREMENT OF HAMMER IS BASED ON PLAN LENGTH AND DESIGN BEARING VALUE OF PILES.
ALL PILES SHALL BE DRIVEN TO PRACTICAL REFUSAL.
MANUFACTURED PILE POINT REINFORCEMENT SHALL BE USED ON ALL PILES IN BENT 5. SEE SPECIAL PROVISION.

① 21' LEFT FOOTING
18" RIGHT FOOTING

PILE & FOOTING DATA (W.B.L.)

	BENT NO.	1	2	3	4	5
BEARING PILE	PILE TYPE AND SIZE		HP12X53			HP10X42
	NUMBER		12			6
	APPROXIMATE LENGTH FT.		68			67
	DESIGN BEARING TONS					
	HAMMER ENERGY REQ'D FT.-LBS.					
SPREAD FOOTING	FOUNDATION MATERIAL	ROCK		SHALE		
	DESIGN BEARING TONS/SQ. FT.	5.5		6.0	6.0	

MINIMUM ENERGY REQUIREMENT OF HAMMER IS BASED ON PLAN LENGTH AND DESIGN BEARING VALUE OF PILES.
ALL PILES SHALL BE DRIVEN TO PRACTICAL REFUSAL.
MANUFACTURED PILE POINT REINFORCEMENT SHALL BE USED ON ALL PILES IN BENT 5. SEE SPECIAL PROVISION.

ESTIMATED QUANTITIES

ITEM		SUBSTR.	SUPERSTR.	TOTAL
PARTIAL REMOVAL OF SUBSTRUCTURE CONCRETE	LUMP SUM			1
REMOVAL OF EXISTING BRIDGE DECK	SQ. FT.		48237	48237
CLASS 1 EXCAVATION	CU. YD.	1255		1255
CLASS 2 EXCAVATION	CU. YD.	422		422
STRUCTURAL STEEL PILES (10")	LIN. FT.	674		674
STRUCTURAL STEEL PILES (12")	LIN. FT.	450		450
PRE-BORE FOR PILING	LIN. FT.	294		294
PILE POINT REINFORCEMENT	EACH	10		10
CLASS B CONCRETE (SUBSTR.)	CU. YD.	992		992
SLAB ON STEEL	SQ. YD.		8339	8339
* SAFETY BARRIER CURB	LIN. FT.		2133	2133
STRIP SEAL EXPANSION DEVICE	LIN. FT.		140	140
REINFORCING STEEL (BRIDGES)	LB.	121740		121740
REINFORCING STEEL (EPOXY COATED)	LB.	2240		2240
FABRICATED STRUCTURAL CARBON STEEL (PLATE GIRDER)	LB.		827350	827350
SLAB DRAINS	EACH		120	120
EXISTING DIAPHRAGM CONNECTIONS TO FLANGES	LUMP SUM			1

NOTE: CONCRETE ABOVE UPPER CONSTRUCTION JOINT IN BACKWALL AT END BENT NO. 1. (E.B.L. & W.B.L.) IS INCLUDED WITH CLASS B (SUBSTRUCTURE) QUANTITIES.
ALL CONCRETE ABOVE THE LOWER CONSTRUCTION JOINT IN THE END BENT NO. 5 (E.B.L. & W.B.L.) IS INCLUDED WITH THE SUPERSTRUCTURE QUANTITIES.
ALL REINFORCEMENT IN END BENT NO. 1 (E.B.L. & W.B.L.) IS INCLUDED WITH SUBSTRUCTURE QUANTITIES.
ALL REINFORCEMENT IN END BENT NO. 5 (E.B.L. & W.B.L.) IS INCLUDED WITH SUPERSTRUCTURE QUANTITIES.
* SAFETY BARRIER CURB SHALL BE CAST-IN-PLACE OPTION OR SLIP-FORM-OPTION.

ESTIMATED QUANTITIES FOR ALTERNATE SLABS

TYPE OF SLABS	SLAB ON STEEL		
	REINF. (LBS.)		CONC. (CU. YDS.)
	EPOXY	PLAIN	
CAST-IN-PLACE CONVENTIONAL FORMS	712820	5910	2112.1
STAY-IN-PLACE FORMS ***	712820	5910	1984.8 **

NOTE: THE TABLE OF ESTIMATED QUANTITIES FOR ALTERNATE SLABS REPRESENTS THE QUANTITIES USED BY THE STATE IN PREPARING THE COST ESTIMATE FOR CONCRETE SLABS. VARIATIONS MAY BE ENCOUNTERED IN THESE ESTIMATED QUANTITIES BUT THESE VARIATIONS CANNOT BE USED FOR AN ADJUSTMENT IN THE CONTRACT UNIT PRICE PER SQUARE YARD OF ALTERNATE SLAB USED.
SEE SPECIAL PROVISIONS FOR ALTERNATE METHODS OF FORMING SLABS.
** DOES NOT INCLUDE CONCRETE REQUIRED TO FILL CORRUGATION OF S.I.P. FORMS.
*** DOES NOT INCLUDE REINFORCING BARS USED AS BAR SUPPORTS.

STATE	PROJ. NO.	SHEET NO.
MO.		300

ELEV. 858.0

DARK BROWN SILTY CLAY, WITH BOULDERS, MOIST.

ELEV. 853.4

WEATHERED GRAY CLAY SHALE.

ELEV. 849.9

LIGHT GRAY LIMESTONE, THIN BEDDED, FINE GRAINED, VUGGY, MODERATELY HARD (CHERT SEAM AT 12.9').

ELEV. 839.6

(1)

(CORE)

ELEV. 810.0

BROWN SILTY CLAY, MOIST.

ELEV. 808.5

BROWN SILTY CLAY WITH GRAVEL, BOULDERS, MOIST.

ELEV. 796.0

LIGHT BROWN SHALE, DRY.

ELEV. 787.9

(2)

STANDARD PENETRATION TEST

DEPTH	BLOWS/6"	
		ELEV. 783.3
		DARK GRAY SILTY CLAY, MOIST.
		ELEV. 772.2
		DARK GRAY SILTY CLAY WITH SOME COBBLES AND GRAVEL. (LIMESTONE LAYER FROM 13.0-14.0').
		ELEV. 769.3
18'	100 IN 4"	DARK GRAY SILTY CLAY, MOIST.
		ELEV. 765.9
23.4'	100 IN 5"	GRAY CLAY SHALE.
28.9'	100 IN 5"	ELEV. 754.4

(3)

STANDARD PENETRATION TEST

DEPTH	BLOWS/6"	
		ELEV. 785.7
5'	4-7-8	DARK GRAY, SILTY CLAY, STIFF TO VERY STIFF, MOIST.
		ELEV. 776.7
10'	2-2-3	GRAY BROWN CLAYEY SILT WITH SOME SAND, SOFT TO MEDIUM STIFF. MOIST.
15'	5-13-9	ELEV. 771.2
		GRAY BROWN SILTY CLAY WITH SOME GRAVEL, SCATTERED COBBLES AND LIMONITE STAINING, MOIST.
19'	100 IN 6"	ELEV. 767.4
25'	100 IN 5"	GRAY CLAY SHALE, VERY STIFF.
30.5'	100 IN 3"	ELEV. 755.2

(4)

ELEV. 837.0

DARK BROWN SILTY CLAY, MOIST.

ELEV. 830.5

DARK GRAY CLAY SHALE FILL.

ELEV. 797.0

COBBLES AND BOULDERS (FILL).

ELEV. 796.0

BOULDERS (FILL). REFUSAL AT 44.8'.

ELEV. 792.2

(5)

REVISED:

BORING DATA

NOTE: FOR LOCATION OF BORINGS SEE SHEET NO. 1. BORING DATA FOR ALL LOCATIONS IS AVAILABLE UPON REQUEST FROM THE DISTRICT OFFICE.

STATE	PROJ. NO.	SHEET NO.
MO.		301

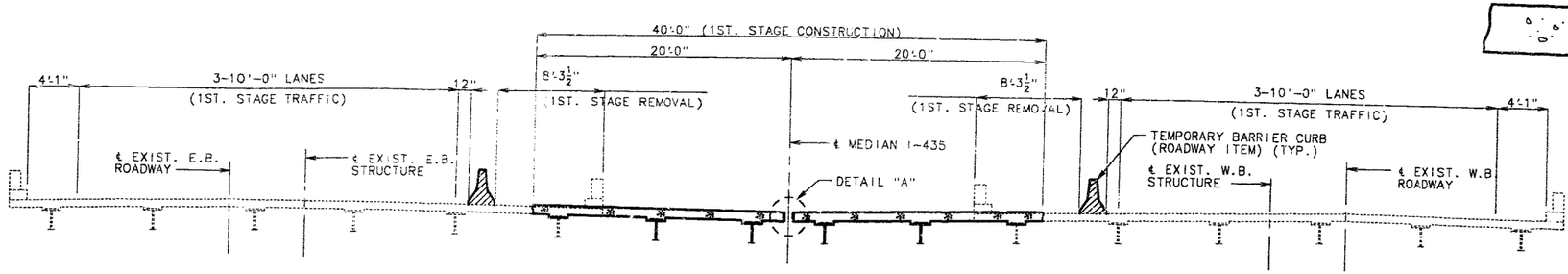

STAGE ONE CONSTRUCTION

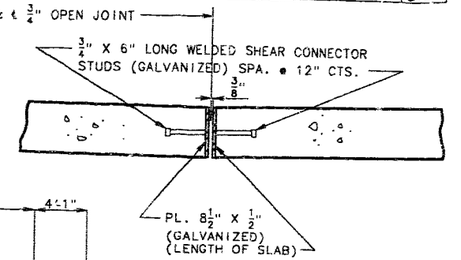

DETAIL "A"

NOTE: THE 8 1/2"X 1/2" GALVANIZED PL. AND THE 3/4" Ø X 6" STUDS ARE INCLUDED IN FABRICATED STRUCTURAL CARBON STEEL QUANTITIES.

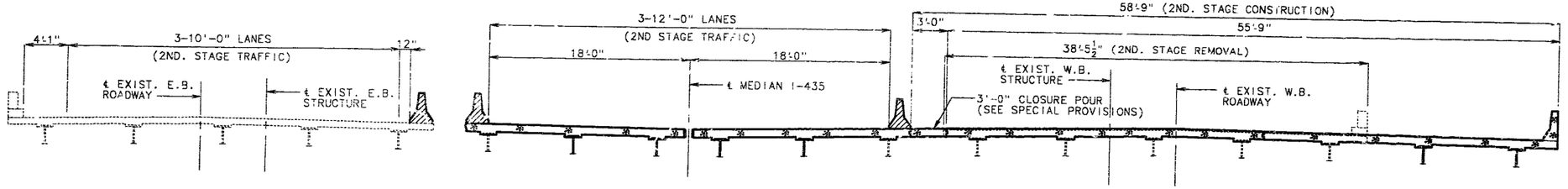

STAGE TWO CONSTRUCTION

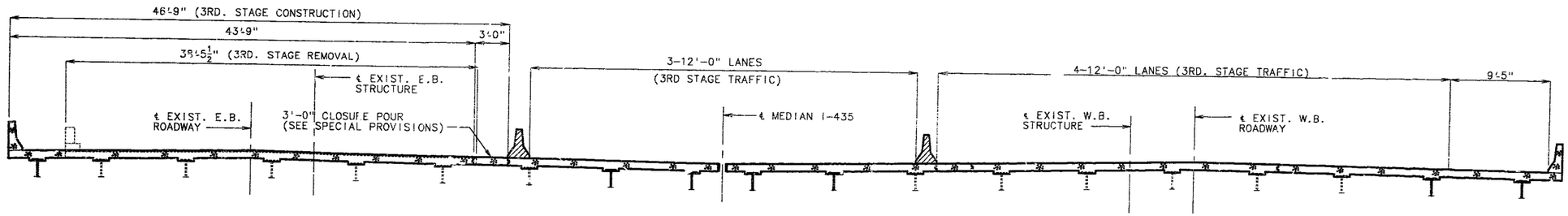

STAGE THREE CONSTRUCTION

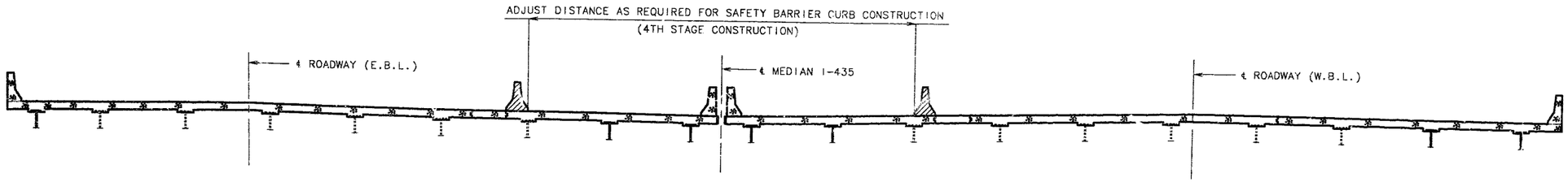

STAGE FOUR CONSTRUCTION

326-289

REVISED:

DETAILED JUNE 1993
CHECKED JUNE 1993

NOTE: THIS DRAWING IS NOT TO SCALE. FOLLOW DIMENSIONS.

STATE	PROJ. NO.	SHEET NO.
MO.		

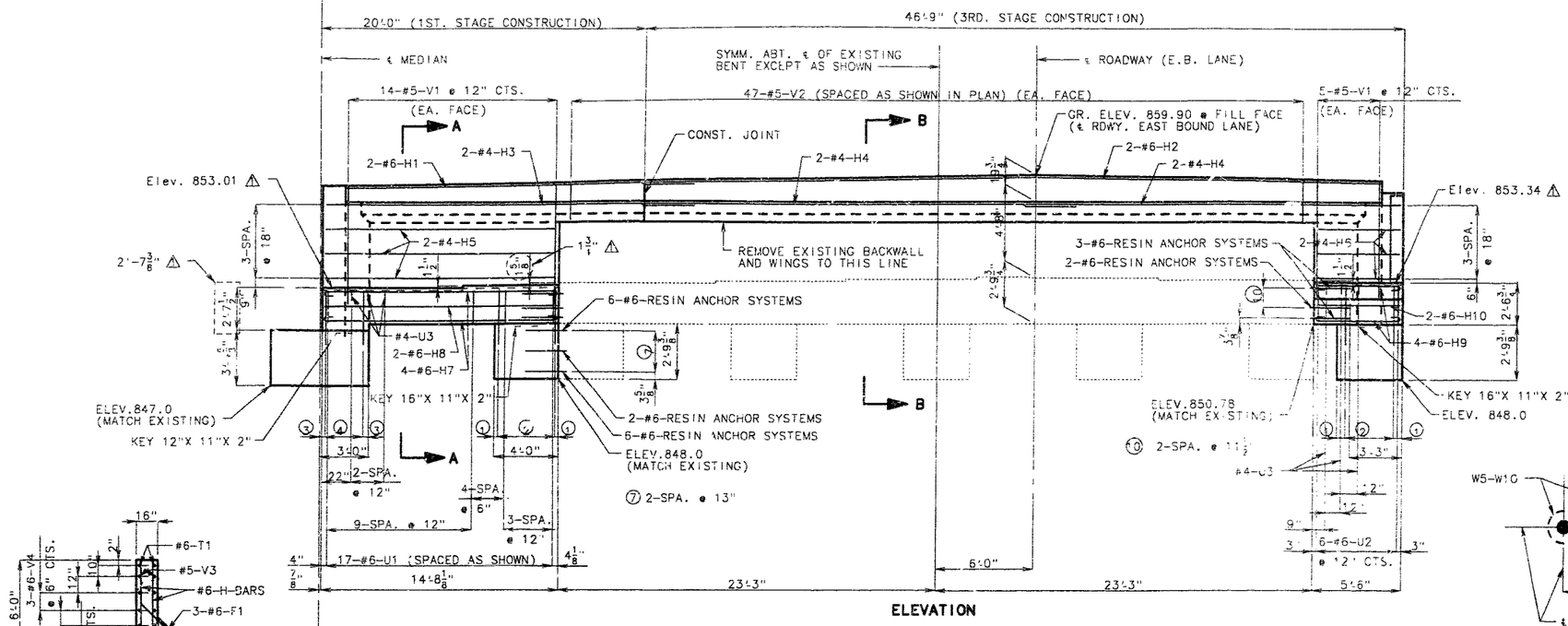

① = 4" FILL FACE
① = 6" FRONT FACE
② = 6-#6-D1 @ 8" CTS. FILL FACE
② = 4-#6-D1 @ 12" CTS. FRONT FACE
③ = 3"
④ = 6-#6-D1 @ 6" CTS. FILL FACE
④ = 4-#6-D1 @ 10" CTS. FRONT FACE

NOTE: TOP OF BACKWALL AND EXPANSION DEVICE FOR END BENT NO. 1 SHALL CONFORM TO THE CROWN OF ROADWAY SLAB. BACKWALL ABOVE UPPER CONSTRUCTION JOINT SHALL NOT BE POURED UNTIL THE SUPERSTRUCTURE SLAB HAS BEEN POURED IN THE ADJACENT SPAN.

FIELD BENDING SHALL BE REQUIRD FOR #6-F-BARS WHEN NECESSARY TO CONFORM TO SLOPE OF WING.

FOR DETAILS OF RESIN ANCHOR SYSTEMS SEE SHEET NO. 22.

FOR DETAIL OF ANCHOR BOLT WELLS SEE SHEET NO. 32.

FOR DETAILS AND REINFOPCEMENT OF SAFETY BARRIER CURB SEE SHEETS NO. 40, 42, 43.

FOR SUBSTRUCTURE QUANITY TABLE, SECTION A-A, B-B AND ELEVATION OF WINGS SEE SHEET NO. 6.

ELEVATION

SECTION THRU WING

PLAN OF ANCHOR BOLTS

PLAN

DETAILS OF END BENT NO. 1

(EAST BOUND LANE)

290

REVISED:

⚠ Revised 5/19/94

DETAILED MAY 1993
CHECKED JUNE 1993

NOTE: THIS DRAWING IS NOT TO SCALE. FOLLOW DIMENSIONS.

JACKSON COUNTY

A-610R1

STATE	PROJ. NO.	SHEET NO.
MO.		303

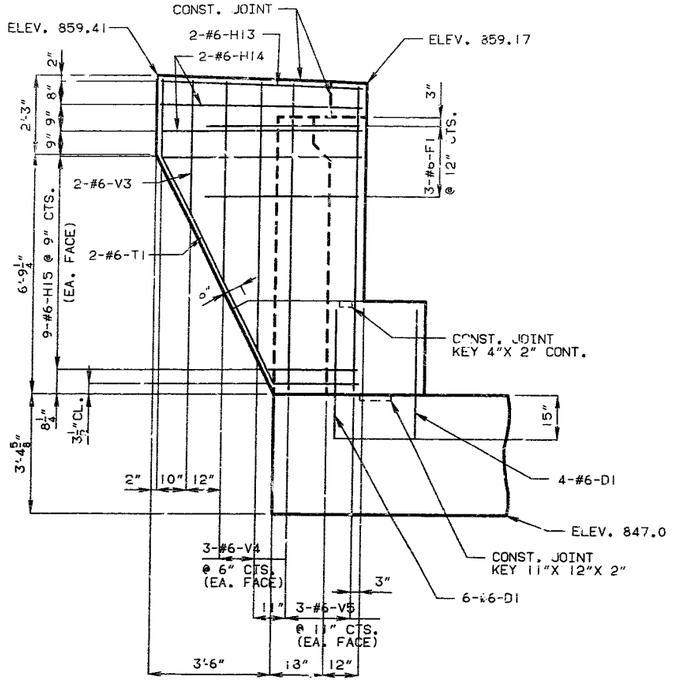

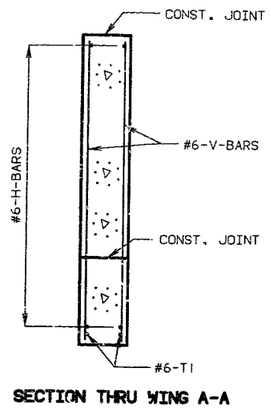

SECTION THRU WING A-A

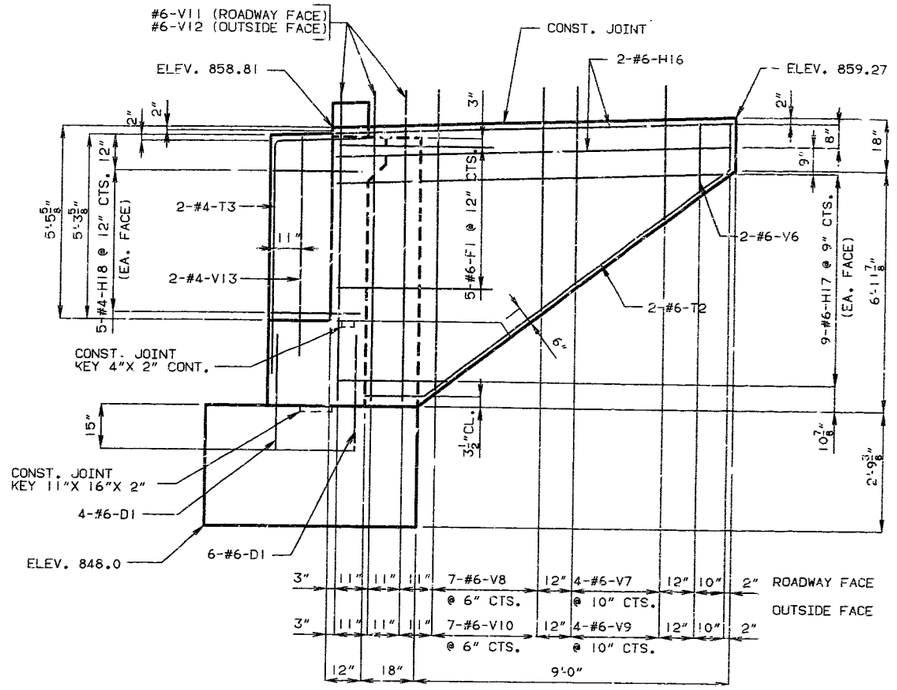

ELEVATION B-B

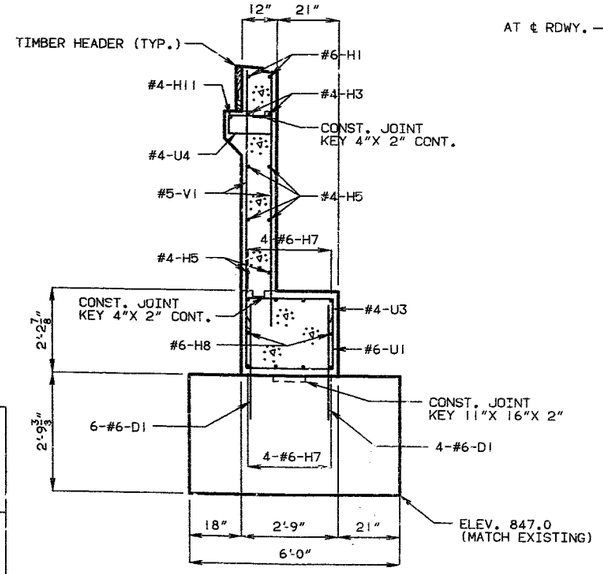

SECTION A-A

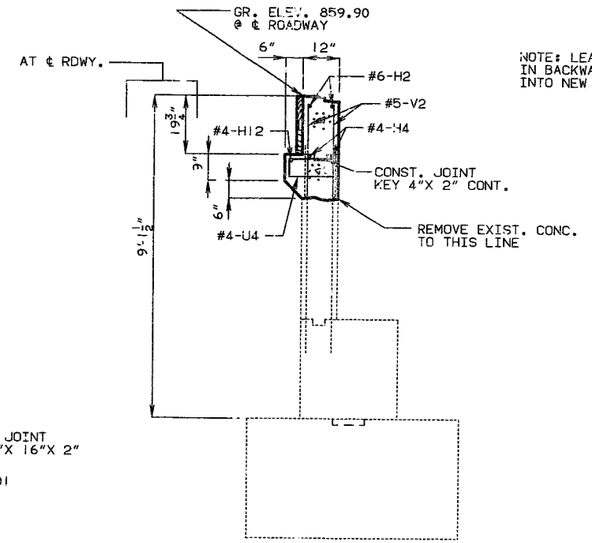

SECTION B-B

NOTE: LEAVE EXISTING V-BARS IN BACKWALL EXTEND 2'-4" INTO NEW CONCRETE.

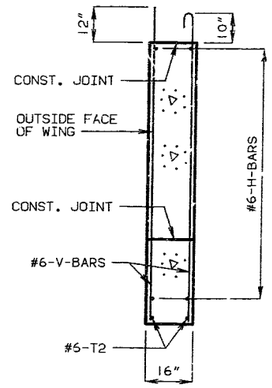

SECTION THRU WING B-B

DETAILS OF END BENT NO. 1
(EAST BOUND LANE)

SUBSTRUCTURE QUANTITY TABLE FOR BENT NO. 1		
ITEM		QUANTITY
CLASS 1 EXCAVATION	CU. YDS.	75
CLASS B CONCRETE (SUBSTR.)	CU. YDS.	37.9
REINFORCING STEEL (BRIDGES)	LB.	2420
REINFORCING STEEL (EPOXY COATED)	LB.	520

NOTE: THESE QUANTITIES ARE INCLUDED IN THE ESTIMATED QUANTITIES TABLE ON SHEET NO. 2.

NOTE: THE AREA EXPOSED BY THE REMOVAL OF CONCRETE AND NOT COVERED WITH NEW CONCRETE SHALL BE COATED WITH AN APPROVED BITUMINOUS PAINT. FOR DETAILS OF TIMBER HEADER SEE SHEET NO. 43.

338 291

REVISED:

DETAILED MAY 1993
CHECKED JUNE 1993

NOTE: THIS DRAWING IS NOT TO SCALE. FOLLOW DIMENSIONS.

MISSOURI STATE HIGHWAY DEPARTMENT

CD. ROAD DIST. NO.	STATE	FED. AID PROJ. NO.	FISCAL YEAR	SHEET NO.	TOTAL SHEETS
5	MO.		19	98	

(112'-145'-145'-112') Cont. Welded R. Girder (Composite)

-4.0% Grade

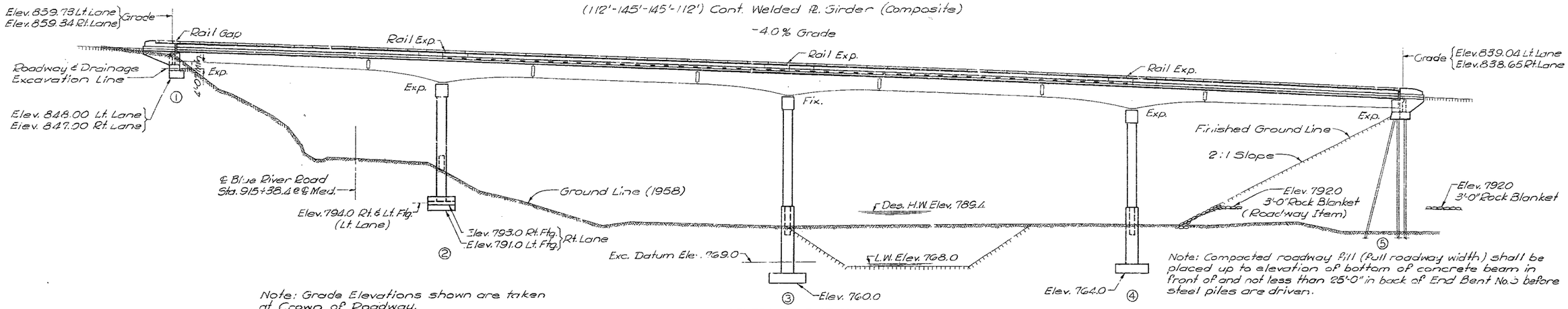

Note: Grade Elevations shown are taken at Crown of Roadway.

Note: Compacted roadway fill (full roadway width) shall be placed up to elevation of bottom of concrete beam in front of and not less than 25'-0" in back of End Bent No.5 before steel piles are driven.

GENERAL ELEVATION

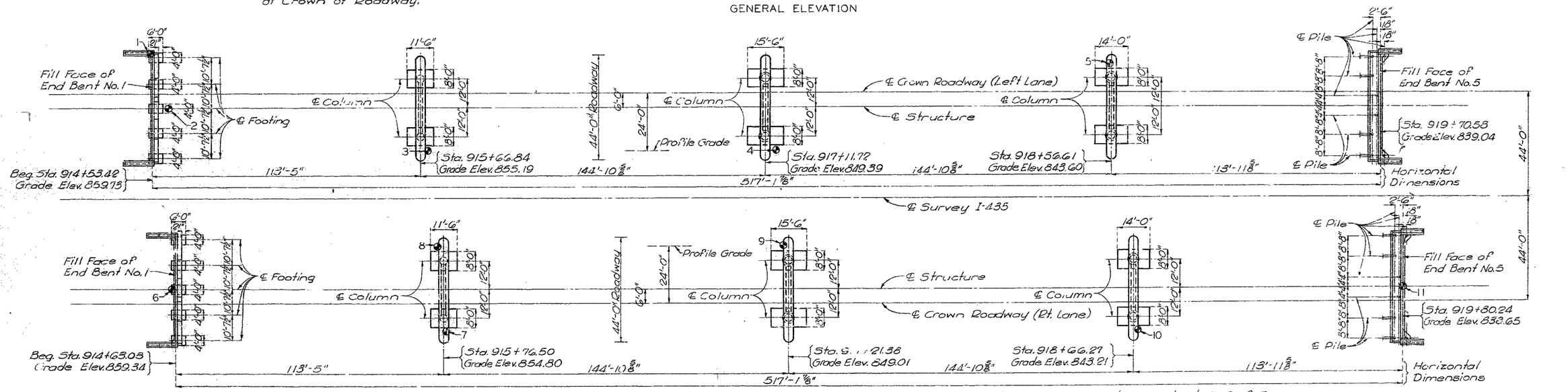

PLAN

Note: For Boring Data see Sheet No. 2 of 17
"⊕" Indicates location of boring.

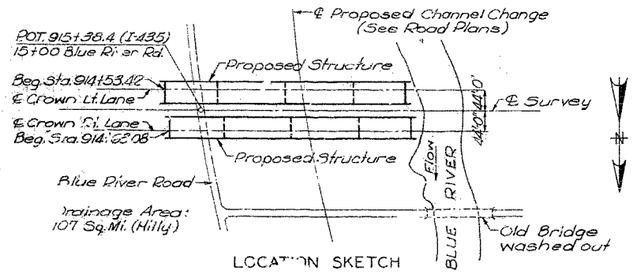

LOCATION SKETCH

ESTIMATED QUANTITIES				
Item		Substr.	Superstr.	Total
Class 1 Excavation for Structures	Cu.Yd.	1,300		1,300
Class 2 Excavation for Structures	Cu.Yd.	410		410
Steel Piles in Place (10")	Lin.Ft.	1,072		1,072
Steel Pile Cut-offs (10")	Lin.Ft.	48		48
Class B Concrete	Cu.Yd.	1,064.6		1,064.6
Class B1 Concrete	Cu.Yd.		1,291.6	1,291.6
Reinforcing Steel	Lb.	136,340	437,110	573,450
Painting	Ton		654.6	654.6
Fabricated Structural Carbon Steel	Lb.		1,312,750	1,312,750
Bridge Rail (Single tube type)	Lin.Ft.		2,089	2,089

Note: Concrete and reinforcing in end posts, parapets and curbs on end bents is included with superstructure Quantities
No payment for excavation will be allowed at End Bent 5.

B.M. #97 - Elev. 813.33 □ in center E.H.W., 141' Rt. Sta. 915 + 28.

BRIDGE OVER BLUE RIVER RD. & BLUE RIVER

STATE ROAD: INTERSTATE ROUTE 435

ABOUT 5.0 MILES NORTH OF MARTIN CITY

PROJECT NO. HG-435-1(53)(RTE. I-435) **STA.** 914 + 53.42 (LT. LANE) 914 + 63.08 (RT. LANE)

JACKSON **COUNTY**

SUBMITTED BY D. B. Quarles (BRIDGE ENGINEER) DATE 5/20/66

APPROVED BY W. J. Snyder (CHIEF ENGINEER) DATE 5/30/66

DESIGNED DEC. 1965 BY STORSLETT
DETAILED JAN 1966 BY WEAVER
CHECKED MARCH 1966 BY MOBERLY

Note: This drawing is not to scale. Follow dimensions.

Sheet No. 1 of 17.

STD. 54.00
A-610

MISSOURI STATE HIGHWAY DEPARTMENT

FED. ROAD DIST. NO.	STATE	FED. AID PROJ. NO.	FISCAL YEAR	SHEET NO.	TOTAL SHEETS
5	MO.		19	99	

Elev. 860.4
Elev. 859.2
Elev. 858.1
Elev. 857.7
Limestone
Black loamy topsoil with float limestone cobbles
Limestone, seamy, hard
Limestone, very hard.
①

Elev. 858.1
Elev. 857.0 — Brownish black loamy topsoil.
Elev. 855.0 — Limestone highly weathered and fractured.
Elev. 853.8 — Shale, stiff, gray, silty.
Elev. 850.9 — Limestone, seamy, somewhat weathered.
Limestone, med. to massive bedded, finely granular, dark gray, hard. Some solution seams. Becoming light gray near base. Bethany Falls Limestone.
Elev. 831.2 — Shale hard, 9 tons/ft. limey, fissile, bluish black. (Hushpuckney shale member).
Elev. 826.8 — Limestone, very algal, reef type deposit, thin to med. bedded. Some soft shale seams. 0.1' to 0.2' thick (Middle Creek member).
Elev. 817.9 — Limestone, massive bedded, hard, finely x-line, light gray, fossiliferous, glauconitic. (Sniabar Limestone member).
Elev. 811.8 — Shale, hard, 9 tons/ft.², dark bluish gray, dry, clayey, fissile (Mound City Shale member). Did not lose water circulation on this hole.
Elev. 810.0
Shale
② CORE

Elev. 855.7
Elev. 854.5 — Clay, brown silty, med.
Limestone highly weathered some clay or shale layers.
Elev. 849.7 — Limestone, med bedded, finely x-line, dark gray hard. Some solution seams.
Elev. 843.5 — Limestone, very thin bedded, unstable. Numerous solution seams.
Elev. 839.3 — Limestone, thin to medium bedded, finely x-line, hard, dark gray. Some solution seams. Becoming lighter gray near base. (Bethany Falls Limestone member)
Elev. 830.? — Shale, bluish gray at top to bluish black at base, all hard, 9 tons/ft.², limey, fissile. (Hushpuckney shale member).
Elev. 825.4 — Limestone, very hard, finely granular, full earthy gray, fossiliferous.
Elev. 824.7 — Limestone, algal, reef type structure, thin bedded, thin shale layers (0.1' to 0.2' thick).
Elev. 820.? — Limestone, massive bedded, light gray, very hard, finely x-line (Sniabar Limestone member).
Elev. 812.0 — Shale, dry, limey, very stiff, light bluish gray, silty (Bottomed in Mound City Shale member).
Elev. 810.4
Shale
⑥ CORE

Elev. 805.0 — Clay, silty and heavy limestone cobbles and boulders. Float material not in place.
Elev. 799.7 — Clay, buff brown silty, stiff.
Elev. 795.4 — Alternating ledge of very hard finely x-line light gray, limestone with very stiff brown/gray shale. Material is in place.
Elev. 790.4 — Shale, dry, silty, light brown, very stiff.
Elev. 784.0
Elev. 781.5 — Shale, dry, clayey, dark bluish gray, very stiff.
Shale
③

Elev. 808.5 — Limestone, cobbles and boulders. Float material not in place.
Elev. 804.0 — Clay, silty, buff brown, stiff. Very stiff below 11.4'.
Elev. 795.0
Elev. 787.6
Elev. 780.5
Elev. 772.5
Shale
⑦

Elev. 805.0 — Clay and limestone cobbles and boulders. Float material not in place.
Ledges of very hard limestone alternating with softer weathered ledges.
Elev. 792.3
Elev. 788.2
Limestone
⑧

Elev. 794.5 — Clay, silty, brown, soft to med. P.A.W.T.
Layer of sand and gravel.
Elev. 771.5
Elev. 767.0
Elev. 765.4 — Shale, weathered, moist, brownish gray, silty.
Shale, silty, bluish gray, stiff grading to very stiff. Wet hole.
Elev. 719.2
Shale
④

Elev. 786.2
Elev. 768.2
Elev. 767.8
Clay, silty, brown, soft to med.
Shale, weathered brownish gray, med.
Shale, very stiff, bluish gray, dry, silty, somewhat laminar. Greater than 9 tons/ft.². Some limey lenses below 30' adding further to the bearing value of the shale. (Pleasanton shale).
Elev. 740.1
Shale
⑤ CORE

Shale, dry, bluish gray, silty, stiff grading to very stiff.
Elev. 720.5
Shale
⑨

Elev. 783.9
Clay, silty, brown soft to med. P.A.W.T.
Layer of sand and gravel.
Elev. 771.4
Elev. 766.9
Elev. 764.9
Shale, weathered, moist, brownish gray, silty, med.
Elev. 785.3
Clay, silty, brownish gray, soft.
Elev. 770.8
Layer of sand and gravel.
Elev. 767.5
Elev. 739.3
Shale
Shale silty, bluish gray dry, silty. Some angular parting planes. Weathered at top according to 9 tons/ft.² below 730 also becoming micaceous in lower portion and leaving laminar parting planes. (Pleasanton Shale).
⑩ CORE

Clay, sandy, brown, mod. stiff. Shale weathered, silty, bluish gray med. to stiff.
Elev. 781.8
Elev. 767.0
Elev. 763.1
Elev. 740.2
Shale
Shale, very stiff, dark bluish gray, somewhat laminar, micaceous, silty, 9 ton/ft.² Shale becomes limey below 29.5' resulting in increased bearing strength. (Pleasanton Shale).
⑪ CORE

Note: "P.A.W.T.": Pushed auger without turning.
See sheet No. 1 of 17 for location of borings.

BORING DATA

GENERAL NOTES:
Design Specifications: A.A.S.H.O. - 1961

Design Loading:
H S20-44 15#/sq.ft. Future Wearing Surface.
Earth 120# Equivalent Fluid Pressure 30#
Modified 24,000# Tandem Axle
Design Unit Stresses:
Class B Concrete (substructure) f'_c = 1,200 psi
Class B1 Concrete (superstructure) f'_c = 1,600 psi
Reinforcing Steel f_s = 20,000 psi
Structural Steel (A.S.T.M. A36-62T) f_s = 20,000 psi
Steel Pile (A.S.T.M. A36-62T) f_b = 9,000 psi

Surface Seal:
Superstructure deck to be surface sealed.

Fabricated Steel:
Field connections, High Strength Bolts 3/4"ϕ, holes 7/8"ϕ except as noted.

Welding:
Details of welded joints shown are for manual arc welding except as noted.

Paint Item:
Paint; shop, none; Field, three coats.

FOOTING AND PILE DATA							
BENT NO.			2	3	4	5	
Spread Footings	Foundation Material		Rock	Shale	Shale	Shale	
	Design Bearing Tons/Sq. Ft.		5.7	6.0	5.9	6.0	
Bearing Pile	Pile type and size						10BP42
	Number						16
	Approximate length	Ft.					70
	Design Bearing	Ton					51
	Hammer Energy	Required* Ft.Lb.					11,500

* Minimum Energy requirement of hammer based on plan length and design bearing value of pile.
All pile shall be driven to practical refusal at 1.9 times the design bearing value.
Steel pile authorized in lengths greater than 65' may be furnished in two pieces for field splicing.
In no case shall the footings of Bents No. 3 and 4 be placed higher than Elevations shown.

BRIDGE OVER BLUE RIVER RD. & BLUE RIVER
STATE ROAD: INTERSTATE ROUTE 435
ABOUT 5.0 MILES NORTH OF MARTIN CITY
PROJECT NO. HG-435-1(53)(RTE. I-435) **STA.** 914+53.42 (LT. LANE) 914+63.08 (RT. LANE)
JACKSON **COUNTY**

153

DETAILED JAN. 1966 BY WEAVER
CHECKED MARCH 1966 BY MOBERLY

Note: This drawing is not to scale. Follow dimensions.

Sheet No. 2 of 17.

A-610

MISSOURI STATE HIGHWAY DEPARTMENT

FED. ROAD DIST. NO.	STATE	FED. AID PROJ. NO.	FISCAL YEAR	SHEET NO.	TOTAL SHEETS
5	MO.		19	100	

COMPLETE BILL OF REINFORCING STEEL

NO.	SIZE	LENGTH	MARK	LOCATION
END BENT NO. 1-LEFT & RIGHT LANE (SUBSTR.)				
108	#6	3'-0"	D7	Footing
20	#6	6'-6"	F1	Wing
8	#6	11'-0"	F2	Wing
8	#6	22'-3"	H1	Backwall
24	#4	23'-9"	H2	Backwall
20	#8	29'-9"	H3	Beam
8	#6	24'-0"	H4	Beam
20	#8	21'-0"	H5	Beam
8	#6	15'-0"	T2	Wing
58	#5	10'-9"	U17	Beam
36	#5	10'-3"	U18	Beam
24	#4	3'-6"	U19	Beam
20	#4	7'-0"	U20	Wing
4	#4	14'-0"	U21	Wing
12	#5	7'-0"	U22	Wing
180	#5	7'-9"	V14	Backwall
8	#6	12'-9"	V19	Wing
40	#4	8'-6"	V20	Wing
16	#5	11'-0"	V21	Wing
20	#6	15'-6"	V22	Wing
24	#2	19'-9"	W1	A.B. Wells
INT. BENT NO. 2-LEFT LANE (SUBSTR)				
24	#5	7'-9"	D3	Footing
30	#10	5'-0"	D1	Footing
14	#10	13'-9"	D6	Footing
8	#11	26'-0"	G13	Tie Beam
4	#9	39'-6"	G1	Beam
4	#9	43'-3"	G2	Beam
12	#6	20'-9"	G3	Beam
18	#11	20'-0"	G4	Beam
6	#11	26'-9"	G5	Beam
8	#7	10'-0"	G8	Beam
10	#6	26'-0"	G9	Tie Beam
22	#5	20'-6"	U1	Beam
10	#5	20'-0"	U2	Beam
4	#5	38'-3"	U3	Beam
4	#5	39'-0"	U4	Beam
16	#4	5'-3"	U5	Beam
2	#4	4'-9"	U6	Beam
1	#5	17'-6"	U7	Beam
1	#5	15'-9"	U8	Beam
1	#5	17'-3"	U9	Beam
1	#5	15'-6"	U10	Beam
36	#10	44'-3"	V1	Column
36	#10	5'-0"	V2	Column
36	#10	11'-9"	V3	Column
40	#10	18'-6"	V4	Column
56	#3	15'-9"	V5	Column
84	#3	12'-9"	V6	Column
12	#2	23'-0"	W2	A.B. Wells
12	#2	19'-9"	W1	A.B. Wells
INT. BENT NO. 2-RIGHT LANE (SUBSTR.)				
24	#5	7'-9"	D3	Footing
30	#10	5'-0"	D1	Footing
14	#10	13'-9"	D6	Footing
4	#9	39'-6"	G1	Beam
4	#9	43'-3"	G2	Beam
12	#6	20'-9"	G3	Beam
18	#11	20'-0"	G4	Beam
6	#11	26'-9"	G5	Beam
8	#7	10'-0"	G8	Beam
10	#6	26'-0"	G9	Tie Beam
8	#11	26'-0"	G13	Tie Beam
8	#7	10'-0"	G8	Beam

NO.	SIZE	LENGTH	MARK	LOCATION
INT. BT. NO. 2-RT. LANE (SUBSTR.) CONTINUED				
22	#5	20'-6"	U1	Beam
10	#5	20'-0"	U2	Beam
4	#5	38'-3"	U3	Beam
4	#5	39'-0"	U4	Beam
16	#4	5'-3"	U5	Beam
2	#4	4'-9"	U6	Beam
1	#5	17'-6"	U7	Beam
1	#5	15'-9"	U8	Beam
1	#5	17'-3"	U9	Beam
1	#5	15'-6"	U10	Beam
21	#4	16'-0"	U23	Tie Beam
24	#10	27'-6"	V9	Column
86	#3	12'-9"	V6	Column
15	#10	19'-6"	V12	Rt. Column
15	#10	21'-6"	V13	Lt. Column
12	#2	19'-9"	W1	A.B. Wells
INT. BENT NO. 3-LEFT LANE (SUBSTR.)				
40	#10	5'-0"	D1	Footing
24	#10	17'-9"	D2	Footing
32	#5	7'-9"	D3	Footing
4	#9	39'-6"	G1	Beam
4	#9	43'-3"	G2	Beam
12	#6	20'-9"	G3	Beam
18	#11	20'-0"	G4	Beam
6	#11	26'-9"	G5	Beam
22	#5	20'-6"	U1	Beam
10	#5	20'-0"	U2	Beam
4	#5	38'-3"	U3	Beam
4	#5	39'-0"	U4	Beam
16	#4	5'-3"	U5	Beam
2	#4	4'-9"	U6	Beam
1	#5	17'-6"	U7	Beam
1	#5	15'-9"	U8	Beam
1	#5	17'-3"	U9	Beam
1	#5	15'-6"	U10	Beam
36	#10	44'-3"	V1	Column
36	#10	5'-0"	V2	Column
36	#10	11'-9"	V3	Column
40	#10	18'-6"	V4	Column
56	#3	15'-9"	V5	Column
84	#3	12'-9"	V6	Column
12	#2	23'-0"	W2	A.B. Wells
INT. BENT NO. 3-RIGHT LANE (SUBSTR.)				
40	#10	5'-0"	D1	Footing
24	#10	17'-9"	D2	Footing
32	#5	7'-9"	D3	Footing
4	#9	39'-6"	G1	Beam
4	#9	43'-3"	G2	Beam
12	#6	20'-9"	G3	Beam
18	#11	20'-0"	G4	Beam
6	#11	26'-9"	G5	Beam
8	#7	10'-0"	G8	Beam
22	#6	26'-0"	G9	Tie Beam
38	#4	11'-9"	G10	Tie Beam
12	#10	27'-0"	G11	Tie Beam

NO.	SIZE	LENGTH	MARK	LOCATION
INT. BT. NO. 3-RT. LANE (SUBSTR.) CONTINUED				
22	#5	20'-6"	U1	Beam
10	#5	20'-0"	U2	Beam
4	#5	38'-3"	U3	Beam
4	#5	39'-0"	U4	Beam
16	#4	5'-3"	U5	Beam
2	#4	4'-9"	U6	Beam
1	#5	17'-6"	U7	Beam
1	#5	15'-9"	U8	Beam
1	#5	17'-3"	U9	Beam
1	#5	15'-6"	U10	Beam
36	#10	44'-3"	V1	Column
36	#10	5'-0"	V2	Column
36	#10	11'-9"	V3	Column
40	#10	18'-6"	V4	Column
56	#3	15'-9"	V5	Column
82	#3	12'-9"	V6	Column
12	#2	23'-0"	W2	A.B. Wells
INT. BENT NO. 4-LEFT LANE (SUBSTR.)				
36	#10	5'-0"	D1	Footing
28	#5	7'-9"	D3	Footing
20	#10	16'-3"	D4	Footing
4	#9	39'-6"	G1	Beam
4	#9	43'-3"	G2	Beam
12	#6	20'-9"	G3	Beam
18	#11	20'-0"	G4	Beam
6	#11	26'-9"	G5	Beam
8	#7	10'-0"	G8	Beam
22	#6	26'-0"	G9	Tie Beam
38	#4	11'-9"	G10	Tie Beam
14	#9	27'-0"	G12	Tie Beam
22	#5	20'-6"	U1	Beam
10	#5	20'-0"	U2	Beam
4	#5	38'-3"	U3	Beam
4	#5	39'-0"	U4	Beam
16	#4	5'-3"	U5	Beam
2	#4	4'-9"	U6	Beam
1	#5	17'-6"	U7	Beam
1	#5	15'-9"	U8	Beam
1	#5	17'-3"	U9	Beam
1	#5	15'-6"	U10	Beam
30	#10	5'-0"	V2	Column
34	#10	11'-9"	V3	Column
24	#5	15'-9"	V5	Column
72	#3	12'-9"	V6	Column
30	#10	38'-3"	V7	Column
36	#10	14'-6"	V8	Column
12	#2	19'-9"	W1	A.B. Wells
INT. BENT NO. 4-RIGHT LANE (SUBSTR.)				
36	#10	5'-0"	D1	Footing
28	#5	7'-9"	D3	Footing
20	#10	16'-3"	D4	Footing
4	#9	39'-6"	G1	Beam
4	#9	43'-3"	G2	Beam
12	#6	20'-9"	G3	Beam
18	#11	20'-0"	G4	Beam
6	#11	26'-9"	G5	Beam
8	#7	10'-0"	G8	Beam
22	#6	26'-0"	G9	Tie Beam
38	#4	11'-9"	G10	Tie Beam
14	#9	27'-0"	G12	Tie Beam

NO.	SIZE	LENGTH	MARK	LOCATION
INT. BT. NO. 4-RT. LANE (SUBSTR.) CONTINUED				
22	#5	20'-6"	U1	Beam
10	#5	20'-0"	U2	Beam
4	#5	38'-3"	U3	Beam
4	#5	39'-0"	U4	Beam
16	#4	5'-3"	U5	Beam
2	#4	4'-9"	U6	Beam
1	#5	17'-6"	U7	Beam
1	#5	15'-9"	U8	Beam
1	#5	17'-3"	U9	Beam
1	#5	15'-6"	U10	Beam
30	#10	5'-0"	V2	Column
34	#10	11'-9"	V3	Column
48	#3	15'-9"	V5	Column
70	#3	12'-9"	V6	Column
30	#10	38'-3"	V7	Column
36	#10	14'-6"	V8	Column
12	#2	19'-9"	W1	A.B. Wells
END BENT NO. 5-LEFT & RIGHT LANE (SUBSTR.)				
20	#6	6'-6"	F1	Wing
8	#6	11'-0"	F2	Wing
3	#6	22'-9"	H1	Backwall
24	#4	23'-9"	H2	Backwall
20	#6	29'-9"	H3	Beam
8	#6	24'-0"	H4	Beam
20	#8	21'-0"	H5	Beam
8	#6	12'-9"	T1	Wing
54	#5	13'-0"	U11	Beam
34	#5	12'-9"	U12	Beam
44	#4	3'-9"	U13	Beam
20	#7	12'-0"	U14	Beam
20	#4	6'-6"	U15	Wing
4	#4	13'-6"	U16	Wing
180	#5	7'-9"	V14	Backwall
20	#4	8'-9"	V15	Wing
32	#4	6'-3"	V16	Wing
16	#6	14'-3"	V17	Wing
8	#6	9'-9"	V18	Wing
24	#2	19'-9"	W1	A.B. Wells

CUTTING DIAGRAMS & BENDING SKETCHES

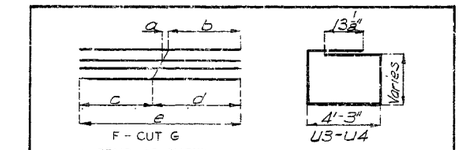

MARK	a	b	c	d	e	F	G	*
U3	3¼"	18'-2⅛"	18'-2⅛"	20'-0⅜"	38'-3"	8	24	*
U4	3¼"	18'-5⅜"	18'-6⅜"	20'-5⅜"	39'-0"	8	24	*
V15	8"	2'-9⅛"	2'-9⅛"	5'-5⅛"	8'-3"	5	20	
V17	10⅜"	5'-0⅛"	5'-0⅛"	9'-2¼"	14'-3"	4	16	
V20	5½	2'-3⅜"	2'-3⅜"	6'-2⅜"	8'-6"	10	40	
V22	2'-1¼"	3'-6½"	3'-6½"	11'-11½"	15'-6"	5	20	

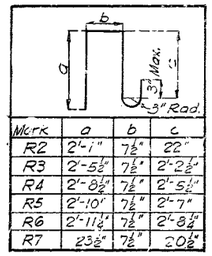

Mark	a	b	c
R2	2'-1"	7½"	22"
R3	2'-5⅛"	7½"	2'-2½"
R4	2'-8½"	7½"	2'-5½"
R5	2'-10"	7½"	2'-7"
R6	2'-11½"	7½"	2'-8½"
R7	23½"	7½"	20½"

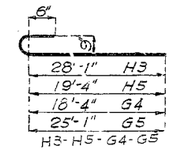

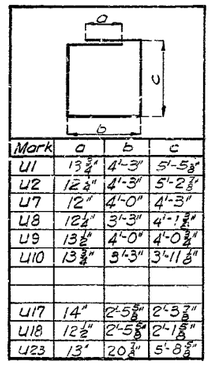

Mark	a	b	c
U1	13¾"	4'-3"	5'-5⅜"
U2	12½"	4'-3"	5'-2⅝"
U7	12"	4'-0"	4'-3"
U8	12¼"	3'-3"	4'-1⅜"
U9	13⅛"	4'-0"	4'-0⅜"
U10	13⅜"	3'-3"	3'-11⅛"
U17	14"	2'-5⅜"	2'-3⅞"
U18	12⅝"	2'-5⅜"	2'-1⅝"
U23	13"	20¼"	5'-8⅜"

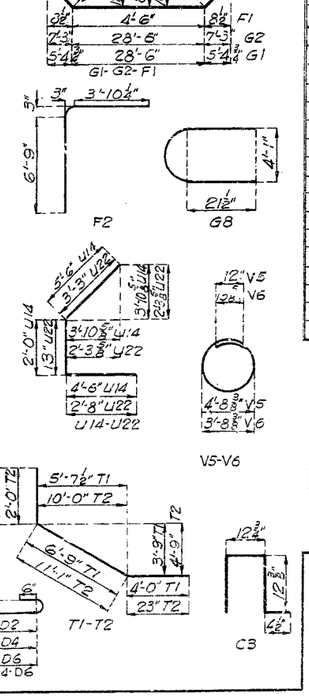

NO.	SIZE	LENGTH	MARK	LOCATION
SUPERSTRUCTURE - LT. & RT. LANE				
2056	#5	3'-6"	C3	Curb
48	#5	38'-5"	C4	Curb
64	#6	37'-3"	C5	Curb
2060	#5	5'-6"	R7	Curb & Parapet
96	#5	10'-3"	R8	Parapet
96	#5	34'-9"	R10	Parapet
128	#5	31'-9"	R11	Parapet
8240	#6	24'-0"	S1	Slab
1692	#4	29'-9"	S2	Slab
1952	#5	33'-6"	S3	Slab
276	#4	16'-0"	S4	Slab
END BT. NO. 1 - LT. & RT. LANE (SUPERSTR.)				
52	#5	3'-6"	C1	Curb
8	#6	12'-9"	C6	Curb
4	#5	5'-6"	R2	End Post
4	#5	6'-3"	R3	End Post
4	#5	6'-9"	R4	End Post
4	#5	7'-0"	R5	End Post
8	#5	7'-3"	R15	End Post
32	#5	5'-3"	R7	Parapet
8	#5	4'-9"	R12	End Post
16	#5	12'-3"	R13	Parapet
END BT. NO. 5 - LT. & RT. LANE (SUPERSTR.)				
40	#5	3'-6"	C1	Curb
8	#6	9'-9"	C2	Curb
24	#5	9'-3"	R1	End Post
4	#5	5'-6"	R2	End Post
4	#5	6'-3"	R3	End Post
4	#5	6'-9"	R4	End Post
4	#5	7'-0"	R5	End Post
24	#5	7'-3"	R6	End Post

BRIDGE OVER BLUE RIVER ROAD AND BLUE RIVER

STATE ROAD: INTERSTATE ROUTE 435

ABOUT 5.0 MILES NORTH OF MARTIN CITY

PROJECT NO. I-IG-435-1(53)(RTE. I-435) **STA.** 914+53.42 (LT. LANE) 914+63.08 (RT. LANE)

JACKSON COUNTY

A-610

159

No. 30.5 Aug. 1963 Revised

DETAILED JAN. 1966 BY WOODS

CHECKED MARCH 1966 BY MOBERLY

Note: This drawing is not to scale. Follow dimensions.

MISSOURI STATE HIGHWAY DEPARTMENT

FED. ROAD DIST. NO.	STATE	FED. AID PROJ. NO.	FISCAL YEAR	SHEET NO.	TOTAL SHEETS
5	MO.		19	101	

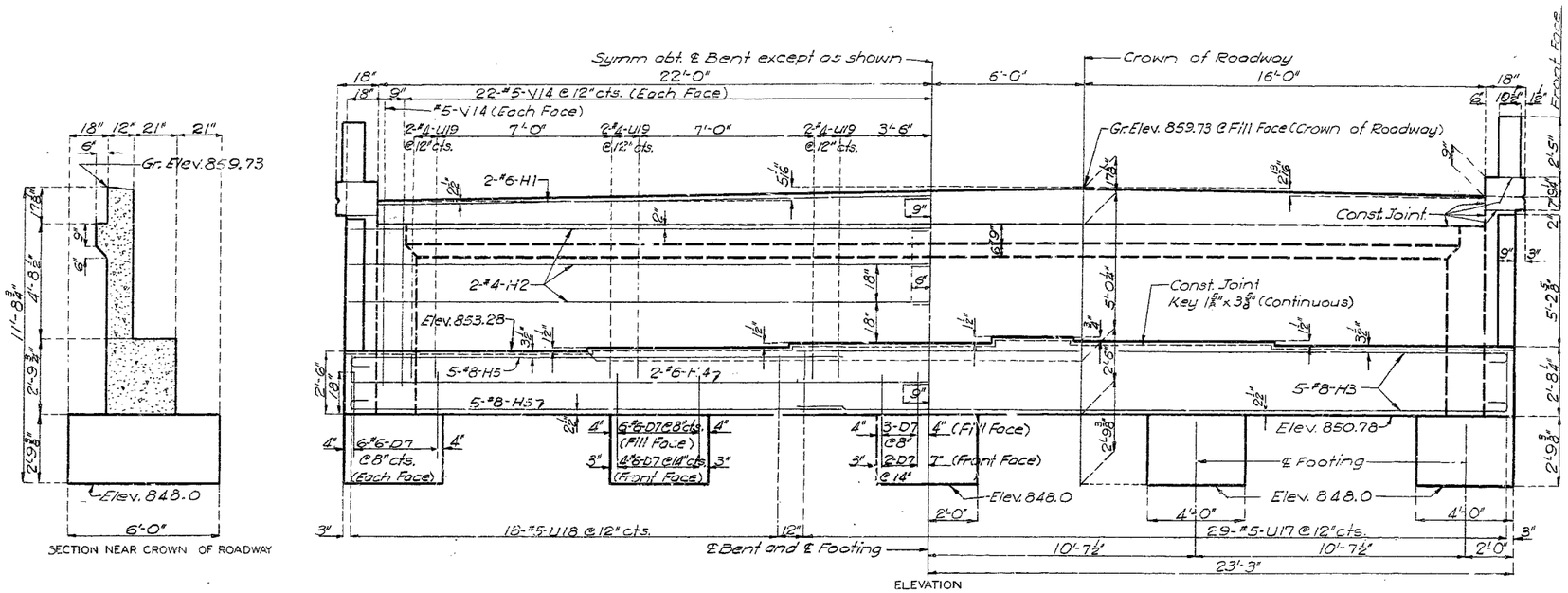

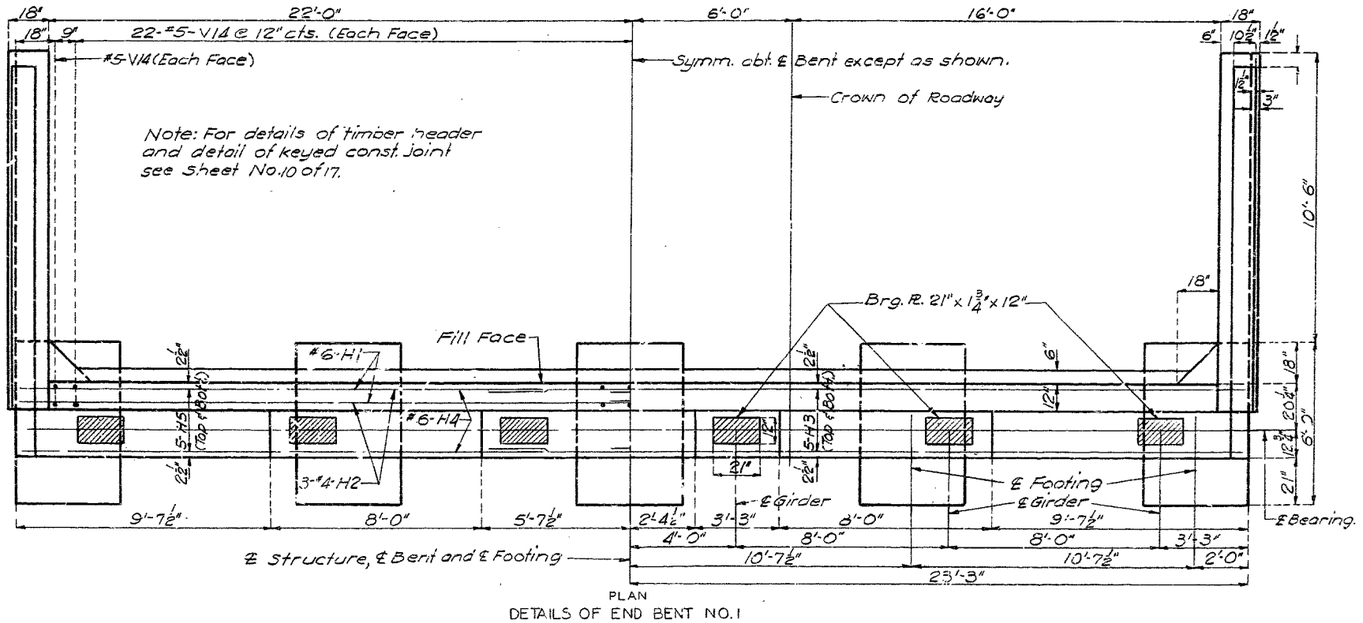

DETAILS OF END BENT NO. 1
LEFT LANE

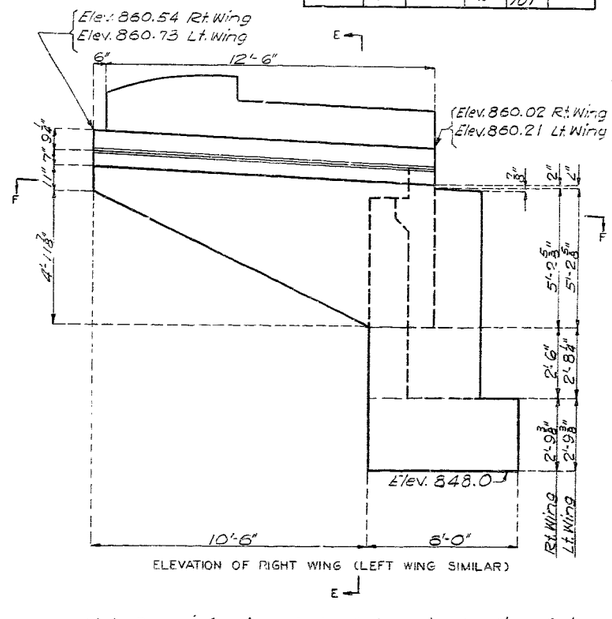

Note: For reinforcing steel not shown in elevation of wings and section near crown of roadway, see sheet No. 5 of 17.
For elevation of end post, end post ordinates, section E-E and section F-F see sheet No. 5 of 17.

Note: Fill at end bent No. 1 left lane shall not be carried above bottom of beam and wings until adjacent superstructure span is in place.
Top of backwall and expansion device for end bent No. 1 left lane to conform to crown of roadway.
Backwall above upper construction joint shall not be poured until the structural steel of the expansion device has been installed and slab has been poured in adjacent span.

BRIDGE OVER BLUE RIVER ROAD AND BLUE RIVER
STATE ROAD: INTERSTATE ROUTE 435
ABOUT 5.0 MILES NORTH OF MARTIN CITY
PROJECT NO. I-IG-435-1(53)(RTE. I-435) **STA.** 914+53.42 (LT. LANE) 914+63.08 (RT. LANE)
JACKSON **COUNTY**

DETAILED JAN. 1966 BY WOODS
CHECKED MARCH 1966 BY MOBERLY

Note: This drawing is not to scale. Follow dimensions.

Sheet No. 4 of 17.

A-610

160

MISSOURI STATE HIGHWAY DEPARTMENT

FED. ROAD DIST. NO.	STATE	FED. AID PROJ. NO.	FISCAL YEAR	SHEET NO.	TOTAL SHEETS
5	MO.		19	102	

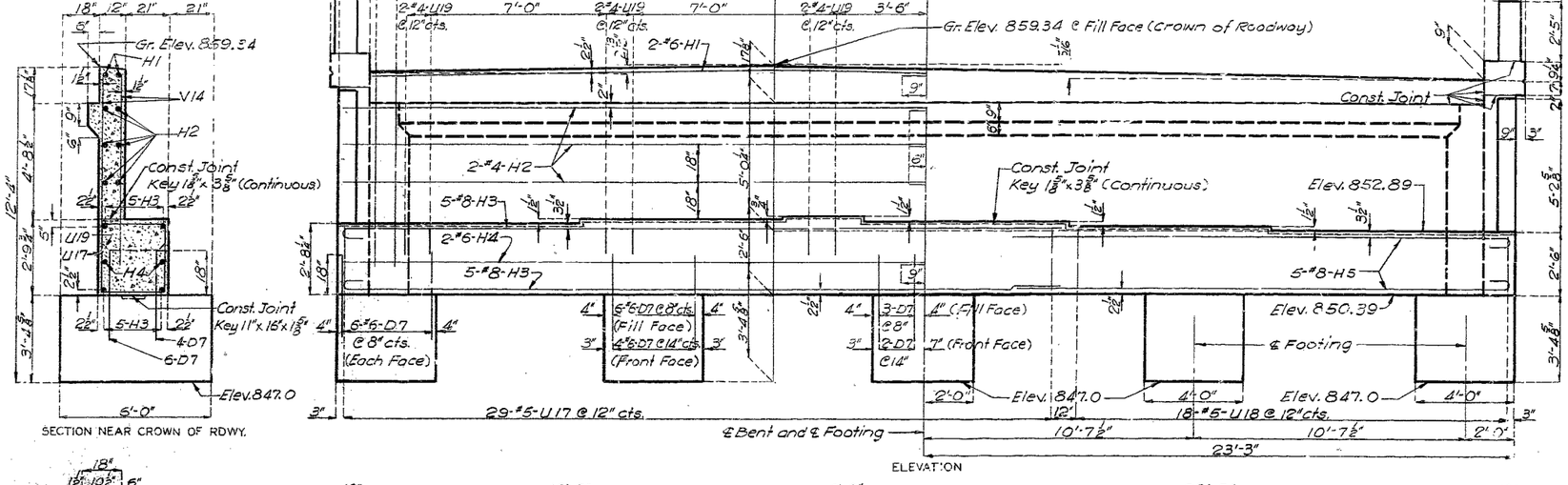

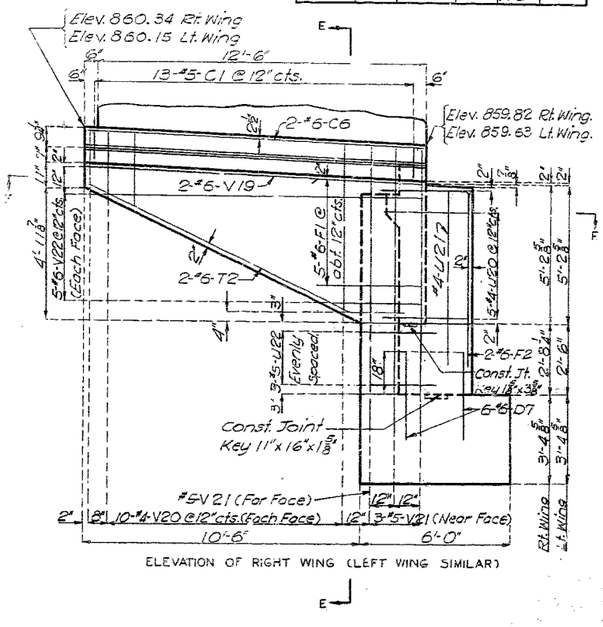

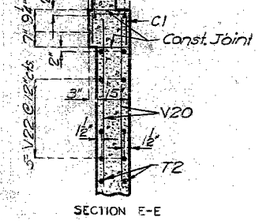

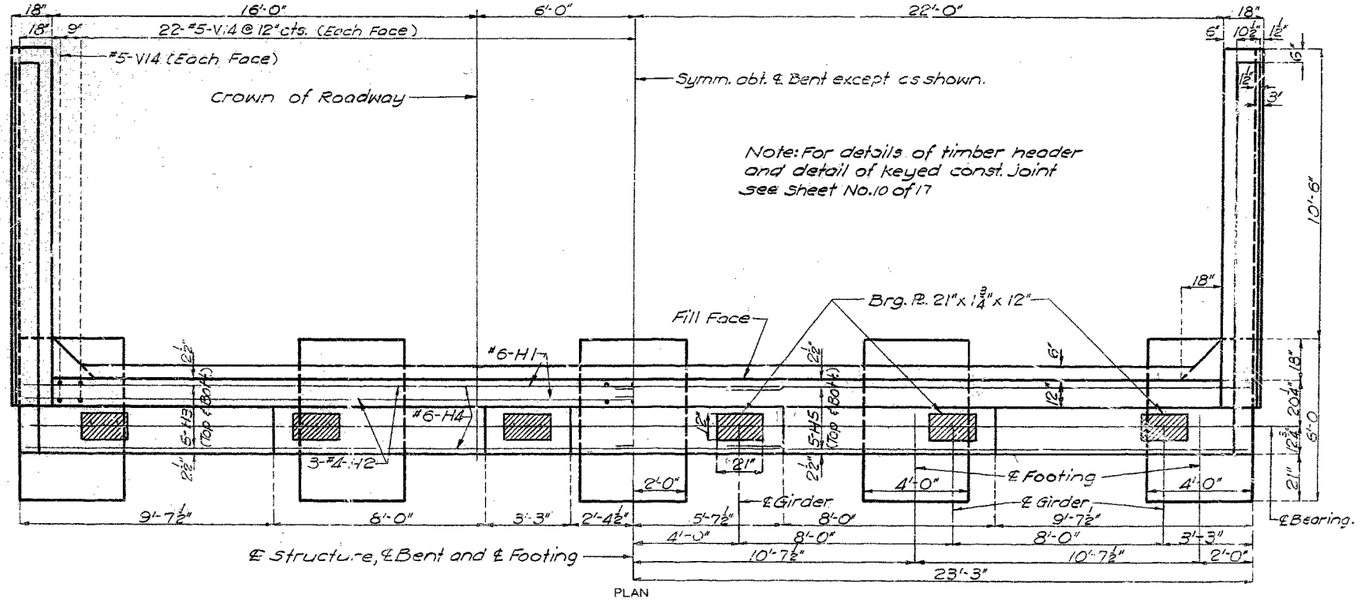

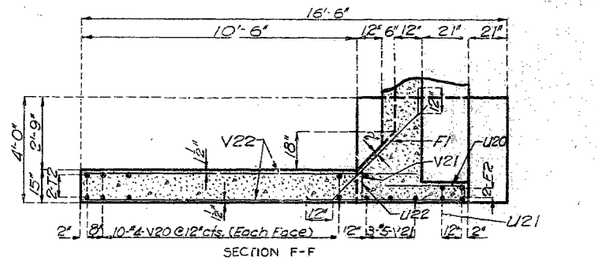

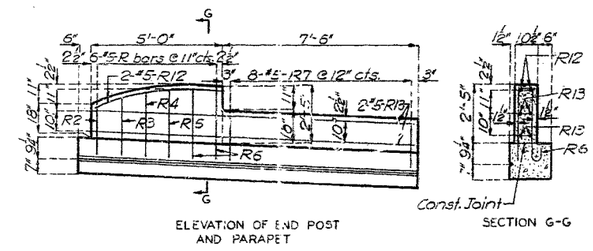

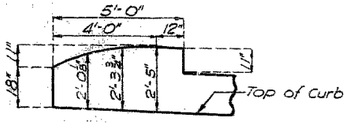

Note: Fill at end bent No. 1 right lane shall not be carried above bottom of beam and wings until adjacent superstructure span is in place.

Top of backwall and expansion device for end bent No. 1 right lane to conform to crown of roadway.

Backwall above upper construction joint shall not be poured until the structural steel of the expansion device has been installed and slab has been poured in adjacent span.

DETAILS OF END BENT NO. 1
RIGHT LANE

BRIDGE OVER BLUE RIVER ROAD AND BLUE RIVER

STATE ROAD: INTERSTATE ROUTE 435

ABOUT 5.0 MILES NORTH OF MARTIN CITY

PROJECT NO. I-IG-435-1(53)(RTE. I-435) **STA.** 914+53.42 (LT. LANE) 914+63.08 (RT. LANE)

JACKSON **COUNTY**

A-610

DETAILED JAN. 1966 BY WOODS
CHECKED MARCH 1966 BY MOBERLY

Note: This drawing is not to scale. Follow dimensions.

MISSOURI STATE HIGHWAY DEPARTMENT

FED. ROAD DIST. NO.	STATE	FED. AID PROJ. NO.	FISCAL YEAR	SHEET NO.	TOTAL SHEETS
5	MO.		19	103	

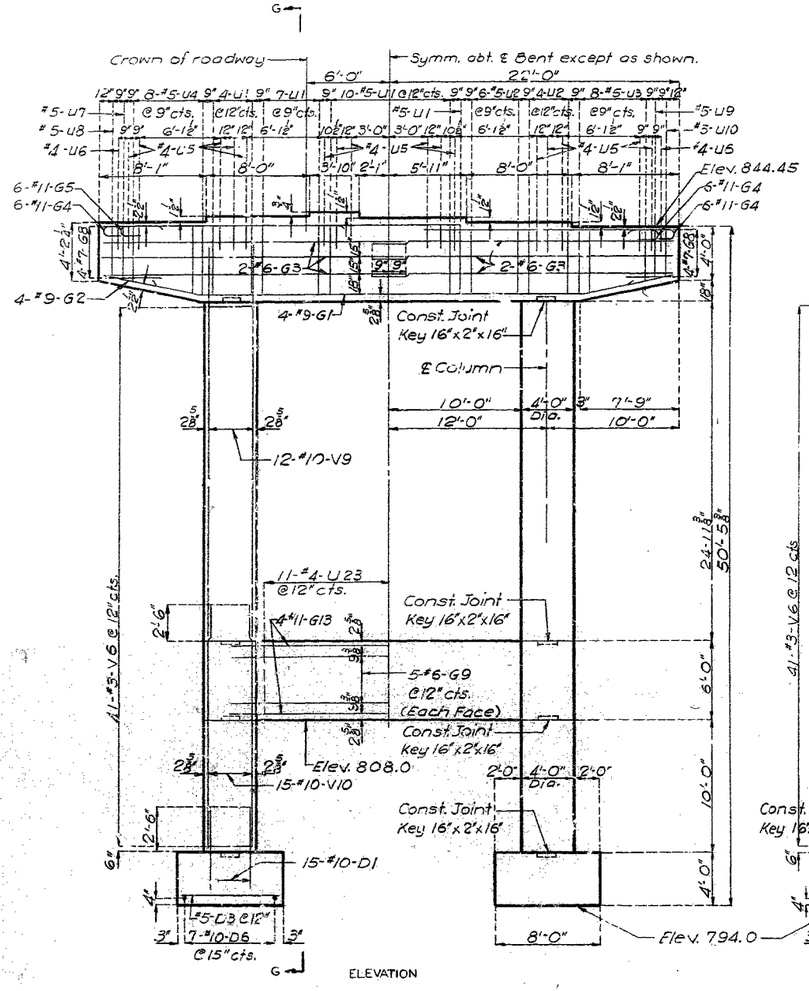

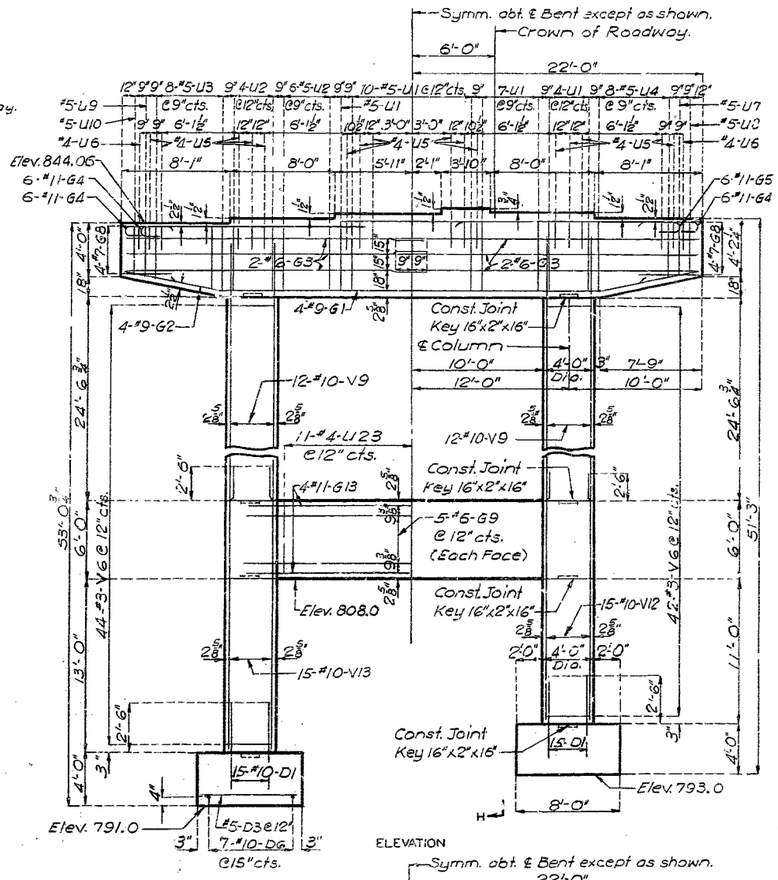

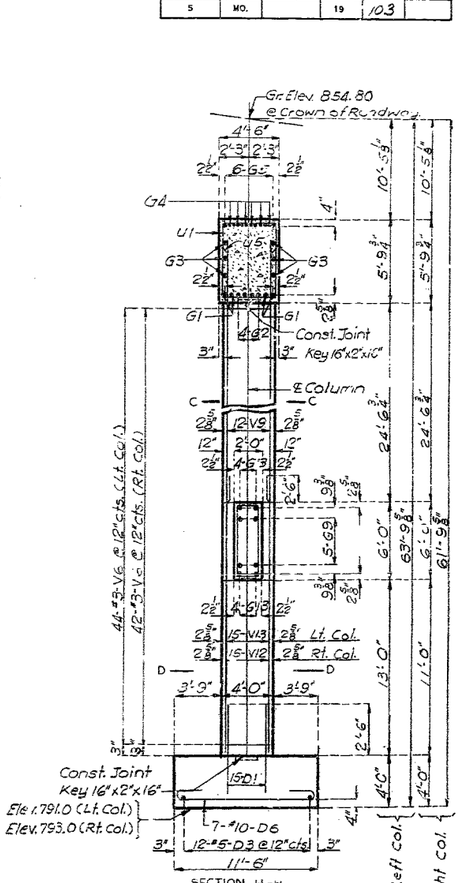

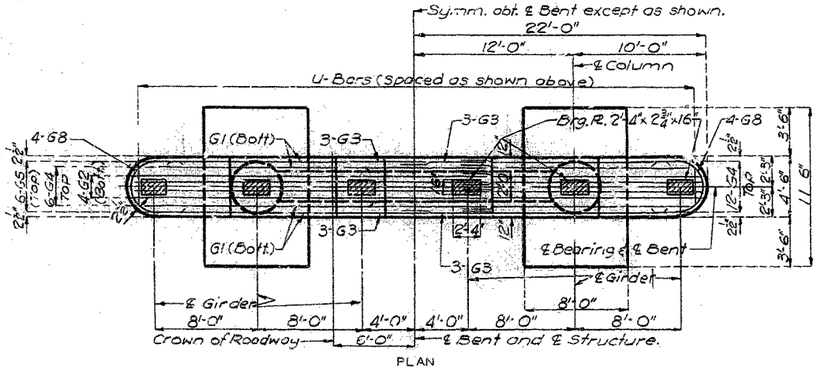

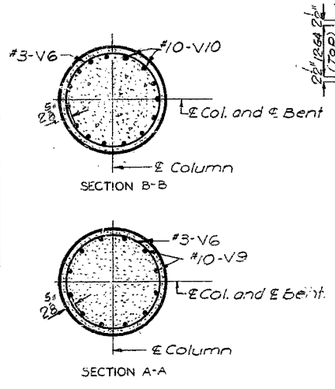

DETAILS OF INT. BENT NO. 2
LEFT LANE

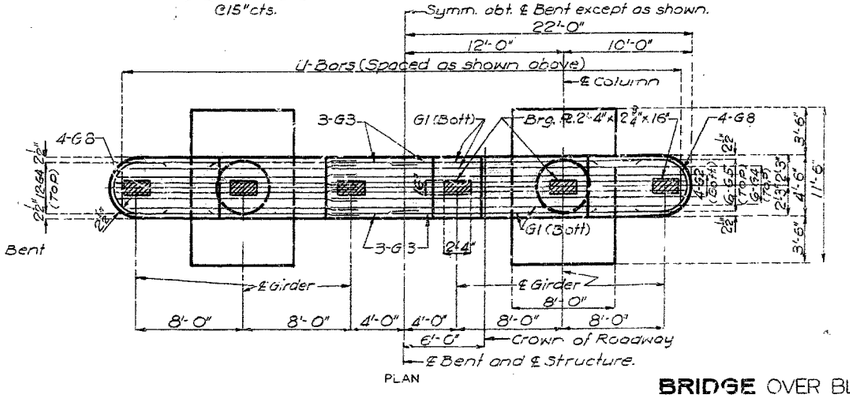

DETAILS OF INT. BENT NO. 2
RIGHT LANE

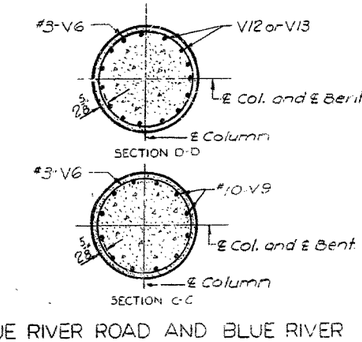

BRIDGE OVER BLUE RIVER ROAD AND BLUE RIVER

STATE ROAD: INTERSTATE ROUTE 435

ABOUT 5.0 MILES NORTH OF MARTIN CITY

PROJECT NO. I-IG-435-1(53)XRTE. I-435) **STA.** 914+53.42 (LT. LANE)
914+63.08 (RT. LANE)

JACKSON **COUNTY**

A-610

102

DETAILED DEC. 1965 BY WOODS
CHECKED MARCH 1966 BY MOBERLY

Note: This drawing is not to scale. Follow dimensions.

MISSOURI STATE HIGHWAY DEPARTMENT

FED. ROAD DIST. NO.	STATE	FED. AID PROJ. NO.	FISCAL YEAR	SHEET NO.	TOTAL SHEETS
5	MO.		19	104	

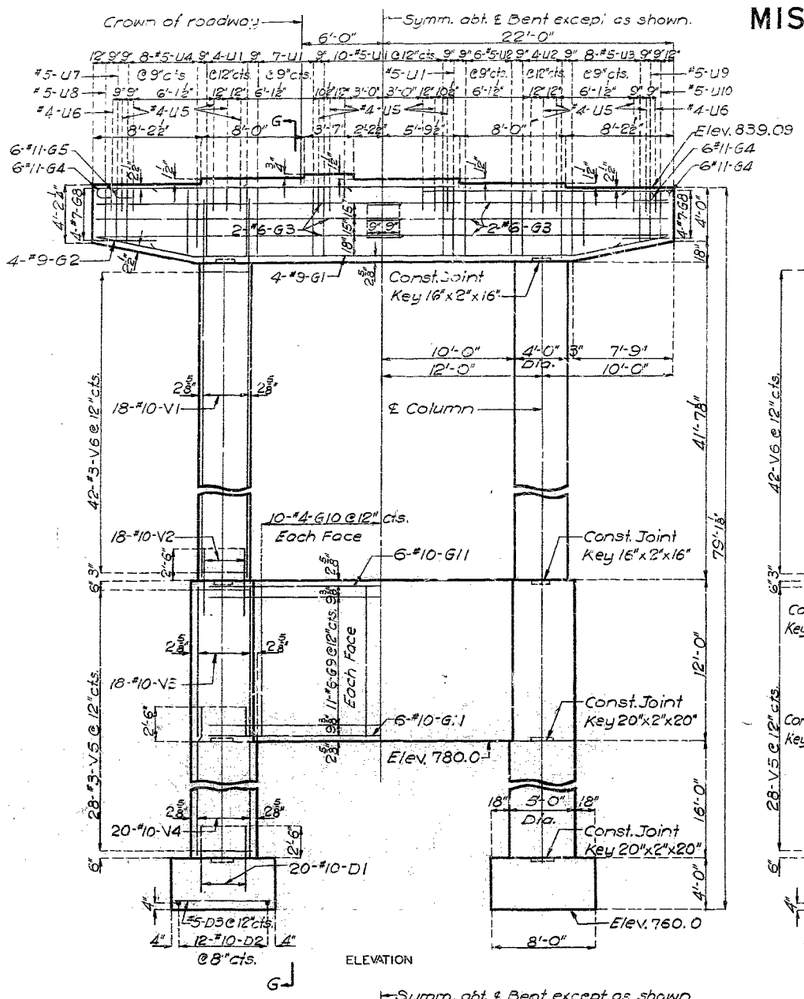

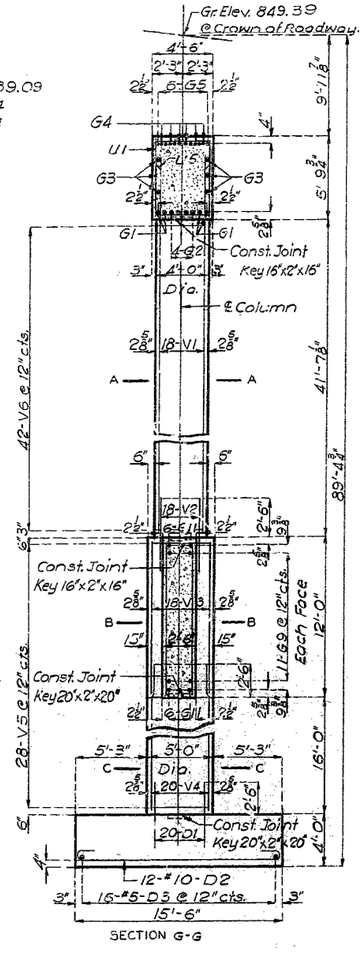

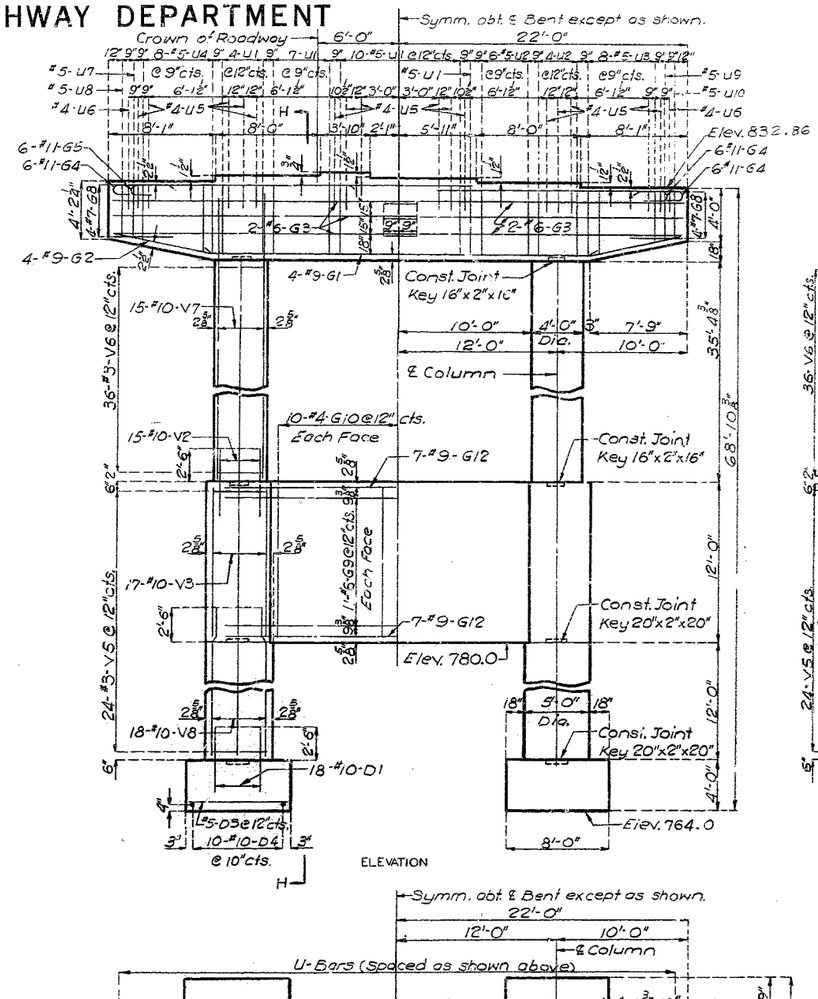

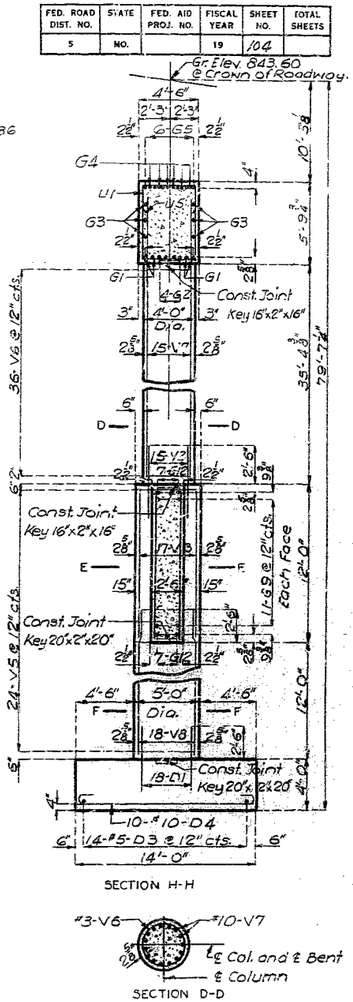

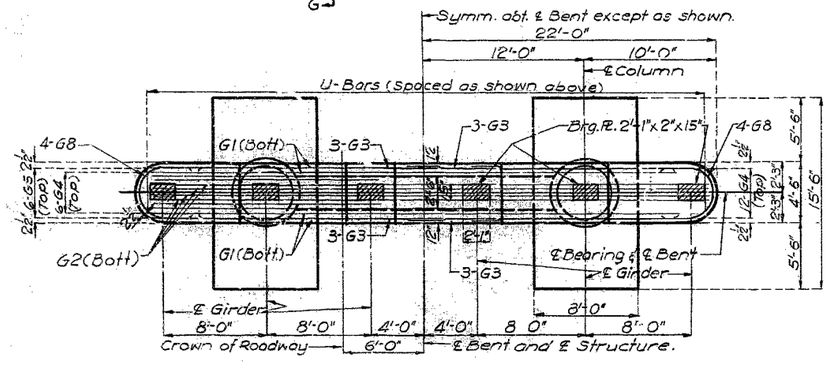

DETAILS OF INT. BENT NO. 3
FT LANE

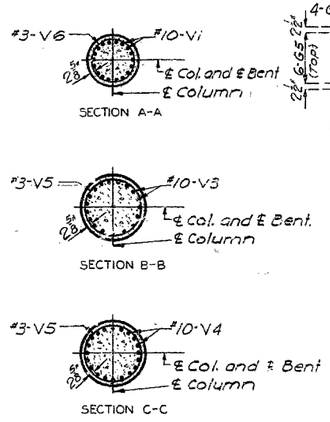

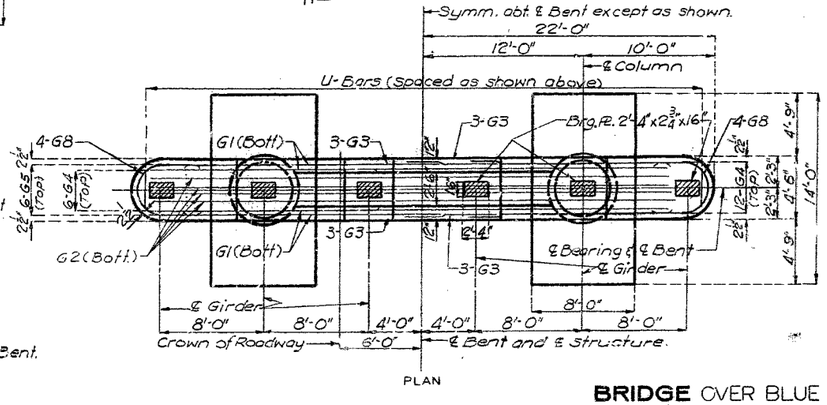

DETAILS OF INT. BENT NO. 4
LEFT LANE

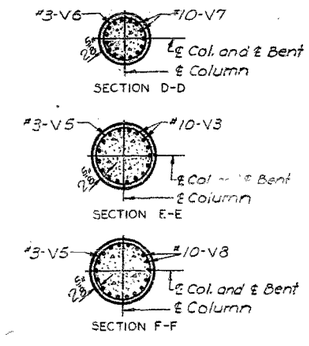

BRIDGE OVER BLUE RIVER ROAD AND BLUE RIVER

STATE ROAD: INTERSTATE ROUTE 435

ABOUT 5.0 MILES NORTH OF MARTIN CITY

PROJECT NO. I-IG-435-1(53)(RTE. I-435) **STA.** 914+53.42 (LT. LANE) 914+63.08 (RT. LANE)

JACKSON **COUNTY**

A-610

DETAILED DEC 1963 BY WOODS
CHECKED MARCH 1966 BY MOBERLY

Note: This drawing is not to scale. Follow dimensions.

MISSOURI STATE HIGHWAY DEPARTMENT

FED. ROAD DIST. NO.	STATE	FED. AID PROJ. NO.	FISCAL YEAR	SHEET NO.	TOTAL SHEETS
5	MO.		19	105	

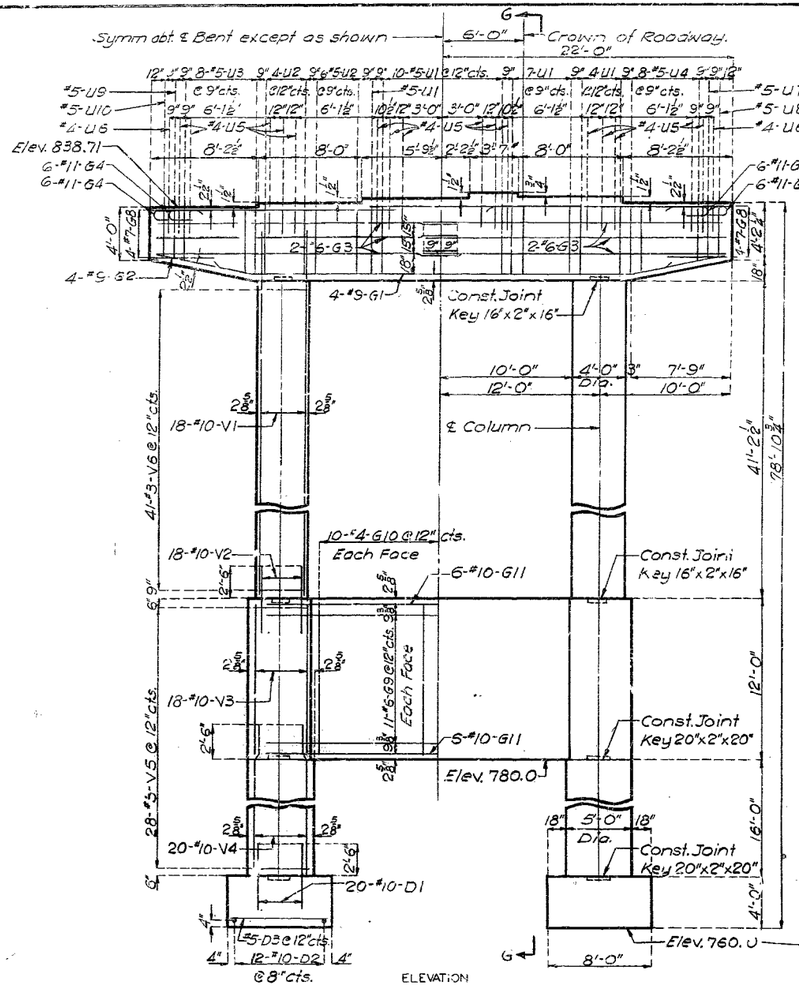

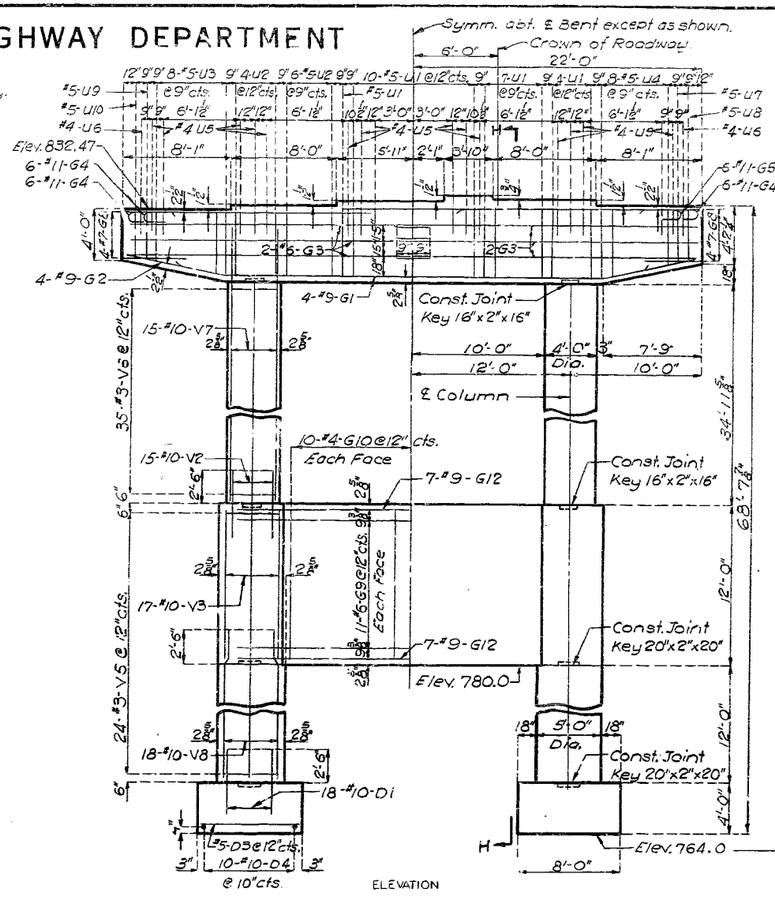

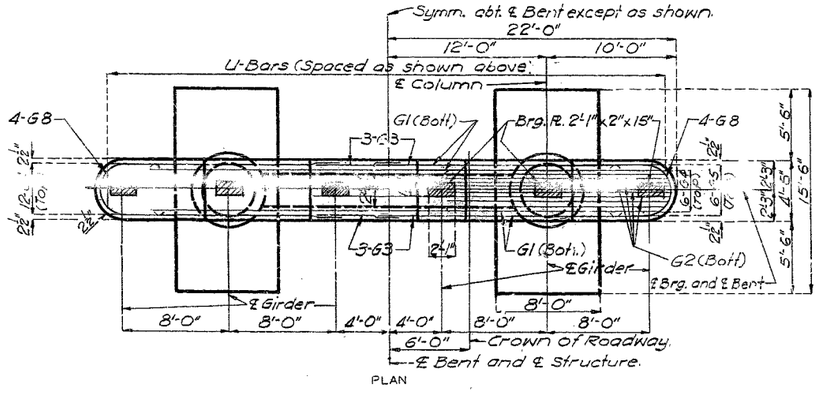

DETAILS OF INT. BENT NO. 3
RIGHT LANE

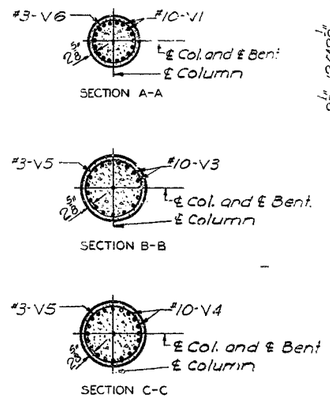

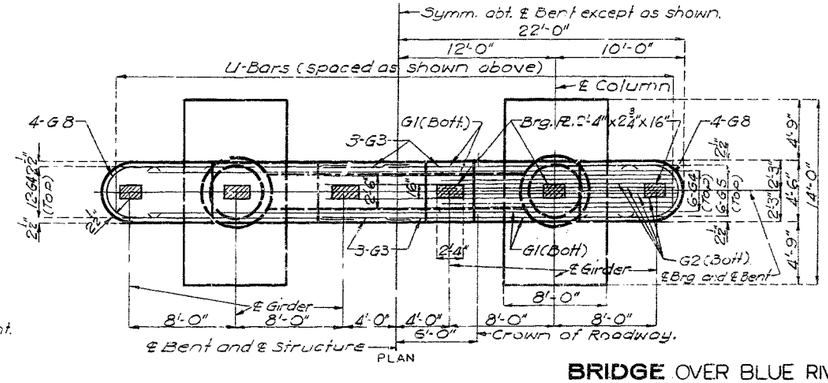

DETAILS OF INT. BENT NO. 4
RIGHT LANE

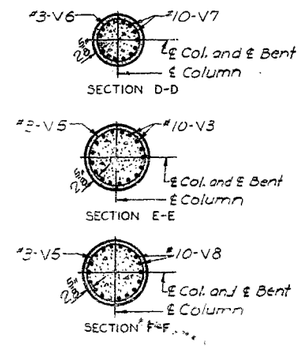

BRIDGE OVER BLUE RIVER ROAD AND BLUE RIVER

STATE ROAD: INTERSTATE ROUTE 435

ABOUT 5.0 MILES NORTH OF MARTIN CITY

PROJECT NO. I-IG-435-1(53)(RTE. I-435) **STA.** 914+53.42 (LT. LANE) 914+63.08 (RT. LANE)

JACKSON **COUNTY**

A-610

164

DETAILED DEC. 1965 BY WOODS
CHECKED MARCH 1966 BY MOBERLY

Note: This drawing is not to scale. Follow dimensions.

MISSOURI STATE HIGHWAY DEPARTMENT

FED. ROAD DIST. NO.	STATE	FED. AID PROJ. NO.	FISCAL YEAR	SHEET NO.	TOTAL SHEETS
5	MO.		19	106	

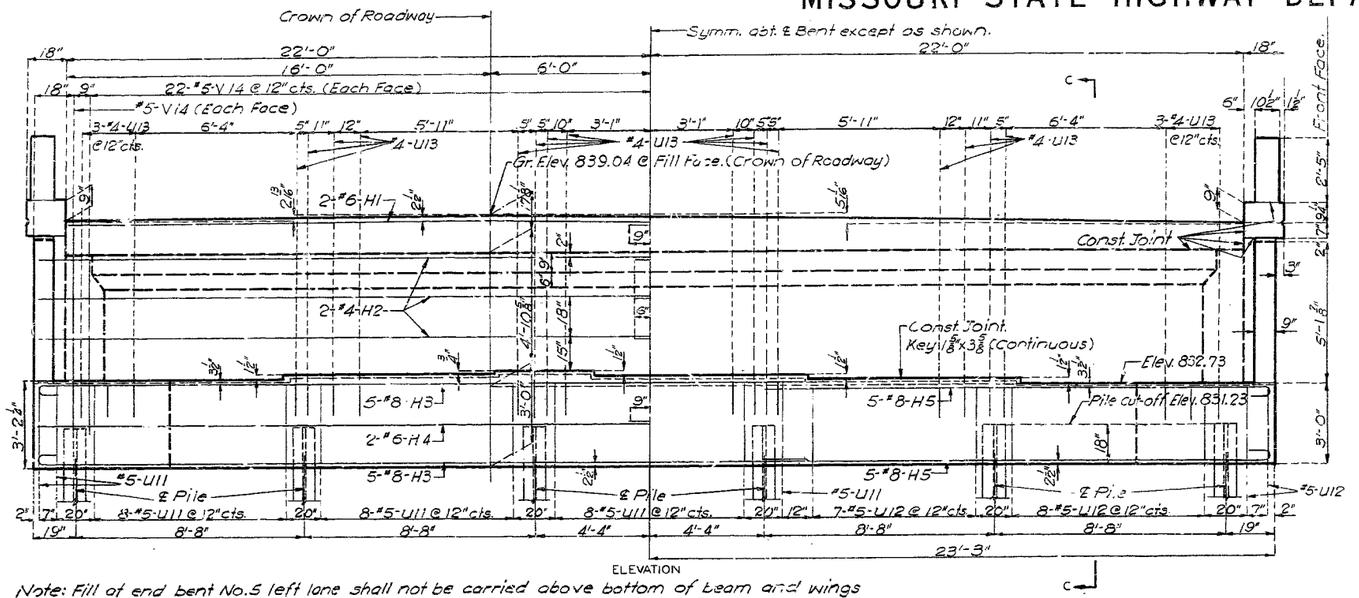

Note: Fill of end bent No.5 left lane shall not be carried above bottom of beam and wings until adjacent superstructure span is in place.

Top of backwall and expansion device for end bent No.5 left lane to conform to crown of roadway slab.

Backwall above upper construction joint shall not be poured until the structural steel of the expansion device has been installed and slab has been poured in adjacent span.

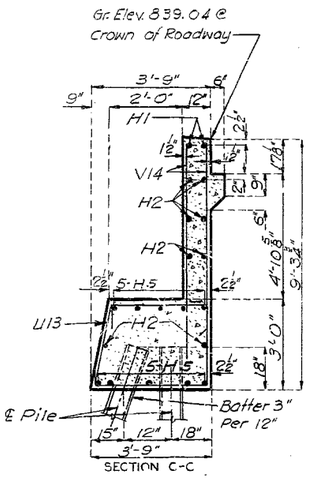

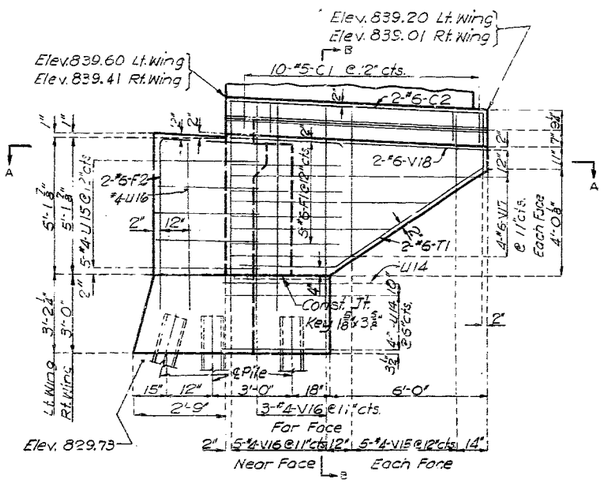

ELEVATION OF RIGHT WING
LEFT WING - SIMILAR

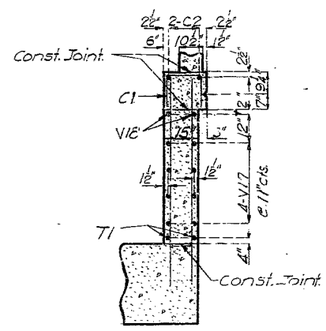

SECTION B-B

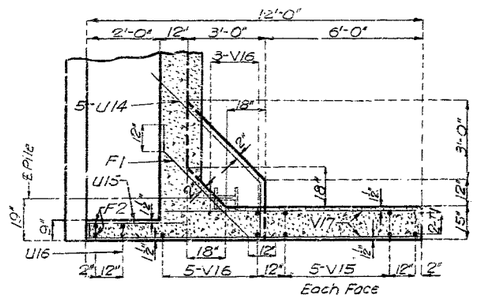

SECTION A-A

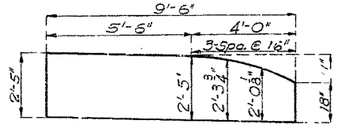

END POST ORDINATES

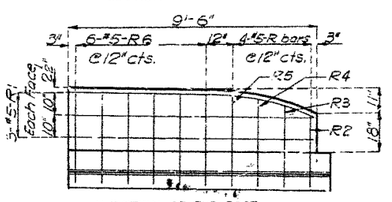

ELEVATION OF END POST

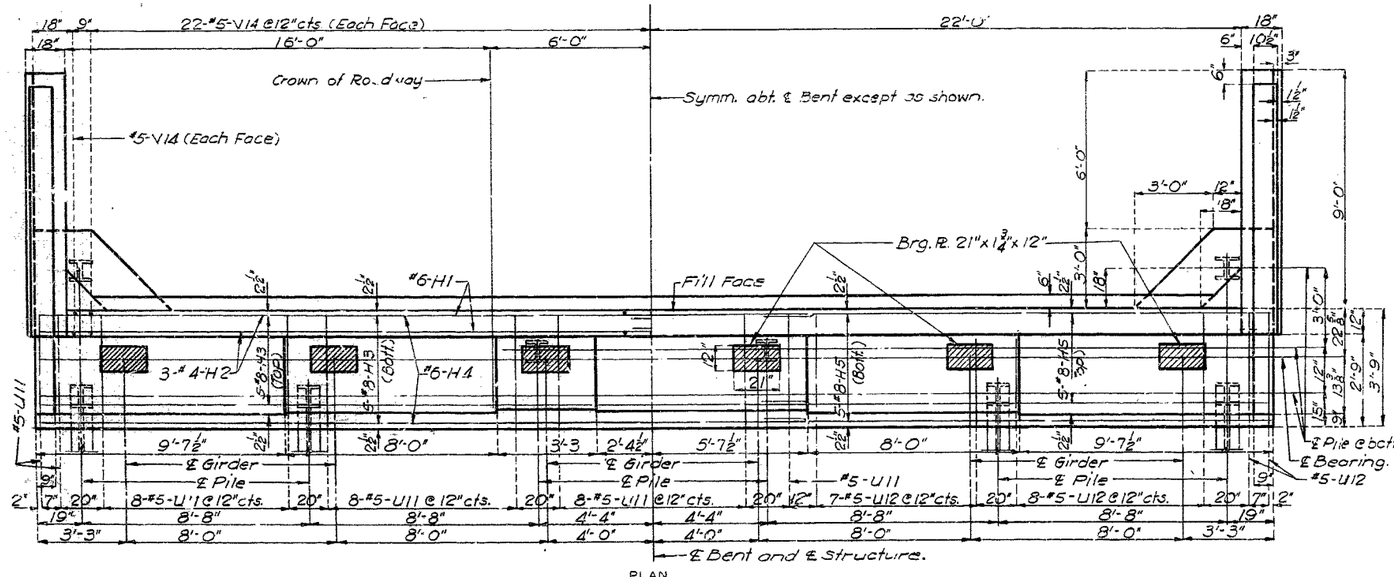

DETAILS OF END BENT NO. 5
LEFT LANE

Note: For details of timber header and detail of keyed const. joint see Sheet No.10 of 17.

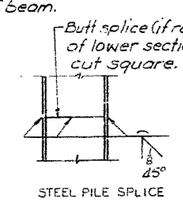

STEEL PILE SPLICE

℄ Pile @ bottom of beam.
℄ Bearing.
#5-U12

BRIDGE OVER BLUE RIVER ROAD AND BLUE RIVER

STATE ROAD: INTERSTATE ROUTE 435

ABOUT 5.0 MILES NORTH OF MARTIN CITY

PROJECT NO. I-IG-435(53) (RTE. I-435) **STA.** 914+53.42 (LT. LANE) 914+63.08 (RT. LANE)

JACKSON **COUNTY**

A-610

DETAILED JAN., 1966 BY WOODS
CHECKED MARCH 1966 BY MOBERLY

Note: This drawing is not to scale. Follow dimensions.

165

MISSOURI STATE HIGHWAY DEPARTMENT

FED. ROAD DIST. NO.	STATE	FED. AID PROJ. NO.	FISCAL YEAR	SHEET NO.	TOTAL SHEETS
5	MO.		19	107	

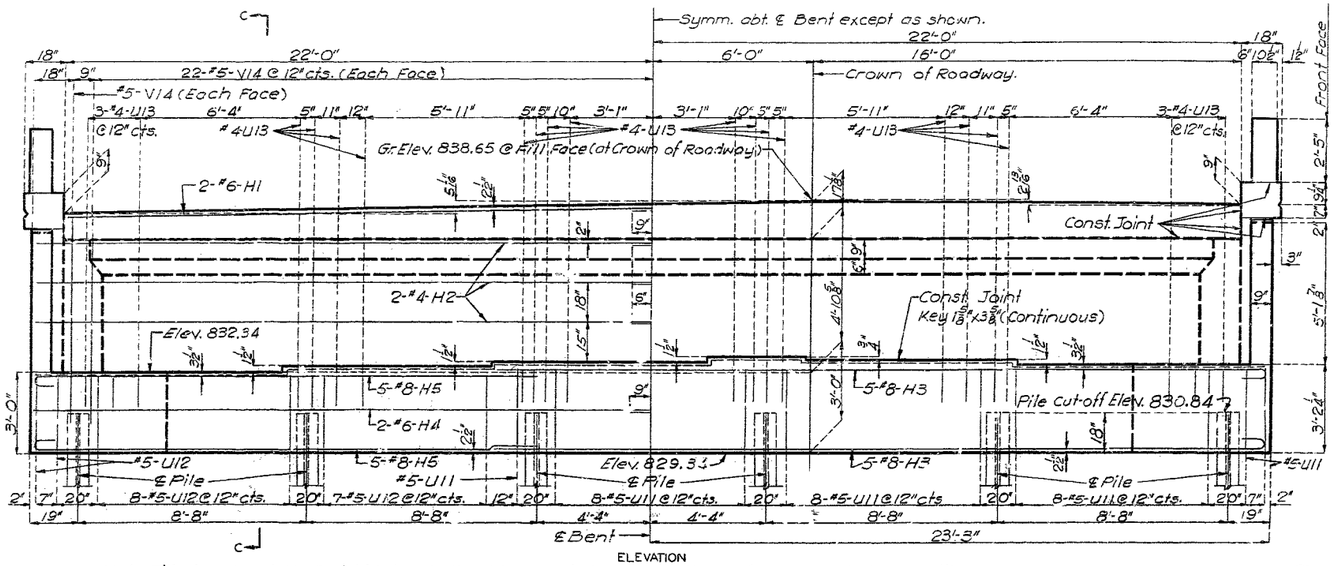

Note: Fill at end bent No. 5 right lane shall not be carried above bottom of beam and wings until adjacent superstructure span is in place.

Top of backwall and expansion device for end bent No. 5, right lane to conform to crown of roadway slab.

Backwall above upper construction joint shall not be poured until the structural steel of expansion device has been installed and slab has been poured in adjacent span.

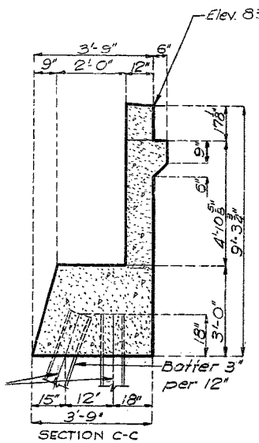

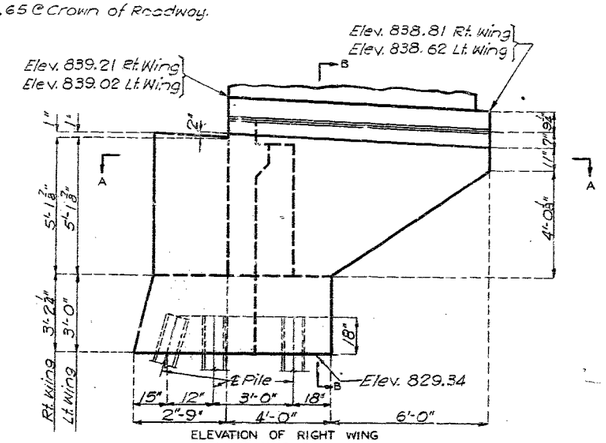

Note: For reinforcing steel not shown in section c-c and elevation of wings see Sheet No. 9 of 17.

For elevation of end post, end post ordinates, steel pile splice, section A-A and section B-B see sheet No. 9 of 17.

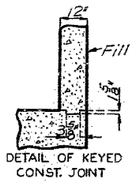

DETAIL OF KEYED CONST. JOINT

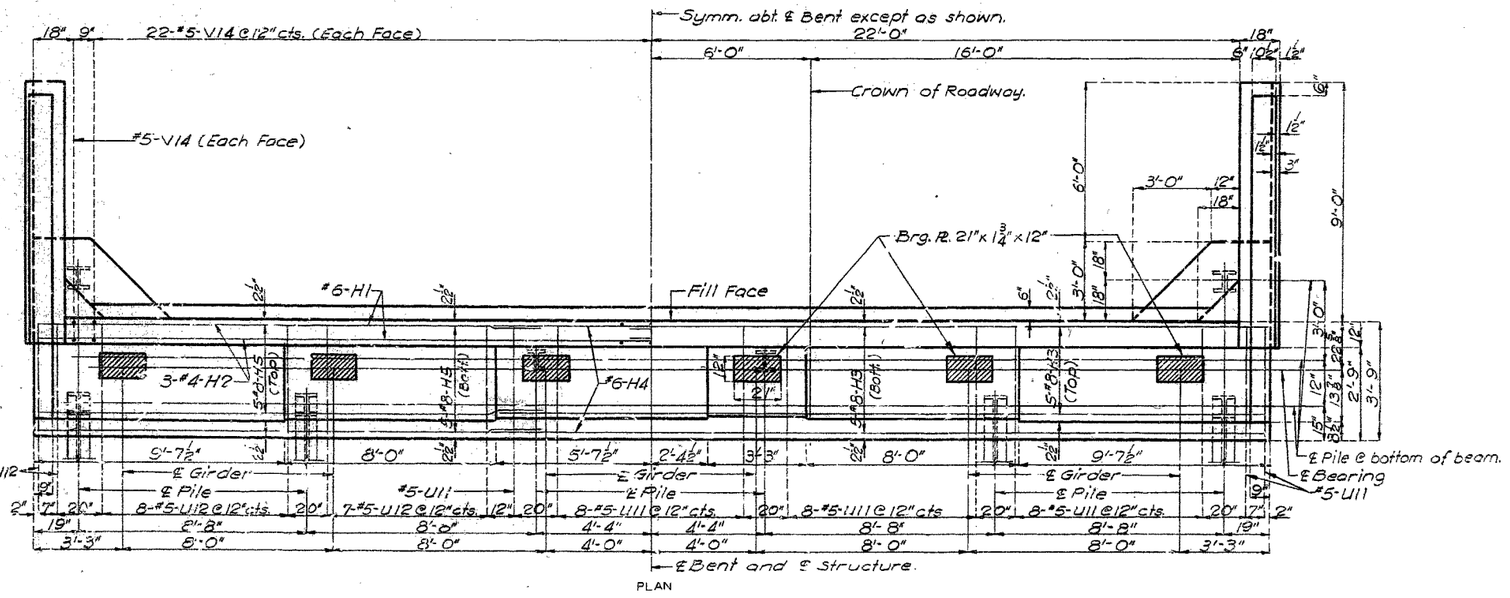

DETAILS OF END BENT NO. 5
RIGHT LANE

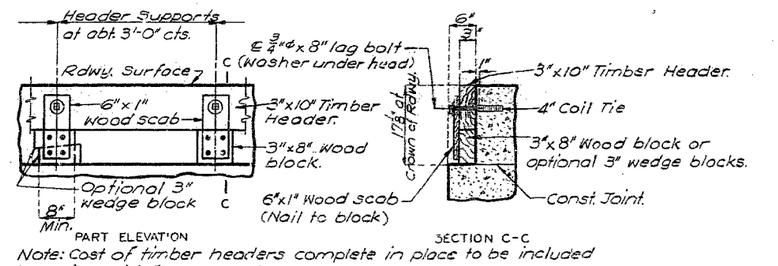

Note: Cost of timber headers complete in place to be included in price bid for concrete.

DETAILS OF TIMBER HEADER

BRIDGE OVER BLUE RIVER ROAD AND BLUE RIVER

STATE ROAD: INTERSTATE ROUTE 435

ABOUT 5.0 MILES NORTH OF MARTIN CITY

PROJECT NO. I-HG-435-1(53) (RTE. I-435) **STA.** 914+53.42 (LT. LANE) 914+63.06 (RT. LANE)

JACKSON **COUNTY**

A-610

DETAILED JAN. 1966 BY WOODS
CHECKED MARCH 1966 BY MUBERLY

Note: This drawing is not to scale. Follow dimensions.

Sheet No. 10 of 17.

16

MISSOURI STATE HIGHWAY DEPARTMENT

FED. ROAD DIST. NO.	STATE	FED. AID PROJ. NO.	FISCAL YEAR	SHEET NO.	TOTAL SHEETS
5	MO.		19	108	

Note: Longitudinal dimensions shown are taken parallel to grade at crown of roadway.

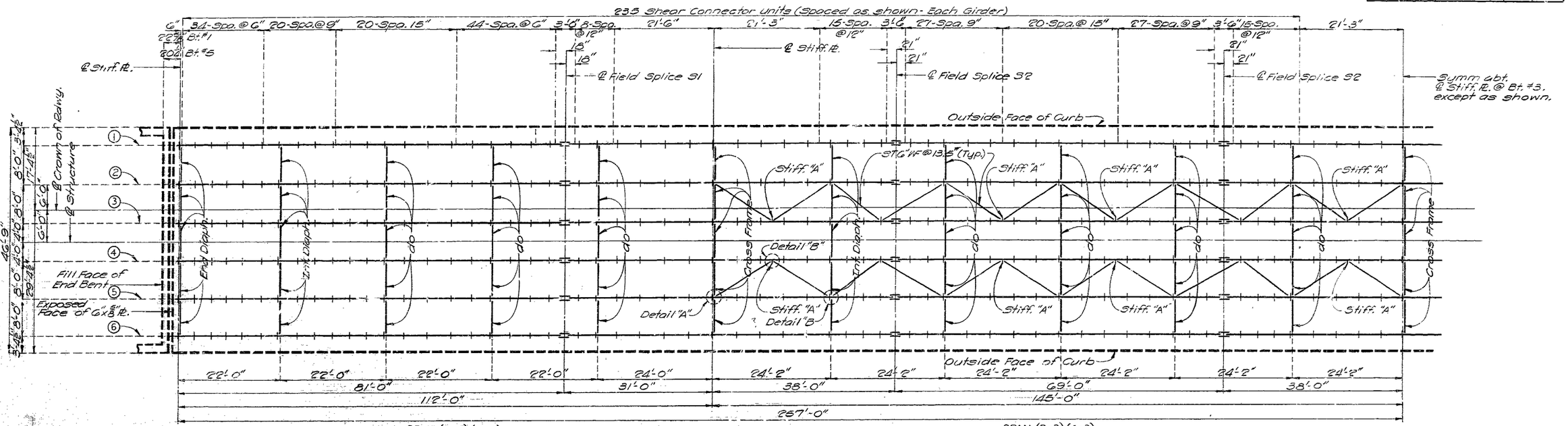

SPAN (1-2) (5-4)

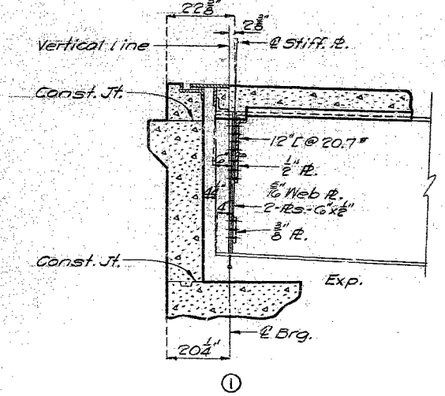

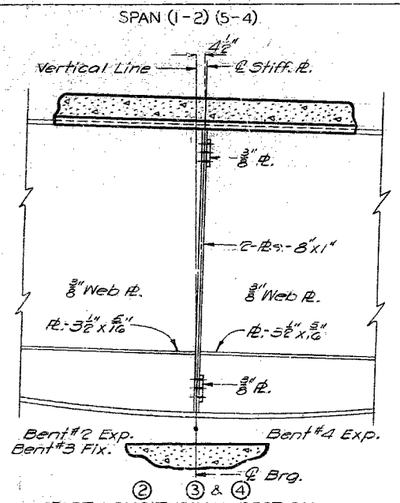

PART LONGITUDINAL SECTION

PART PLAN OF STRUCTURAL STEEL (LEFT LANE)

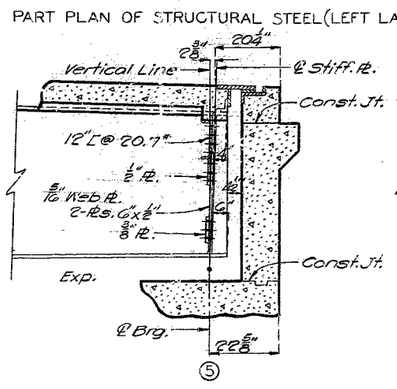

SPAN (2-3) (4-3)

Note: Plan of Structural Steel for Right Lane is opposite hand laterally.

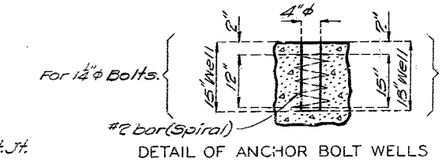

DETAIL OF ANCHOR BOLT WELLS

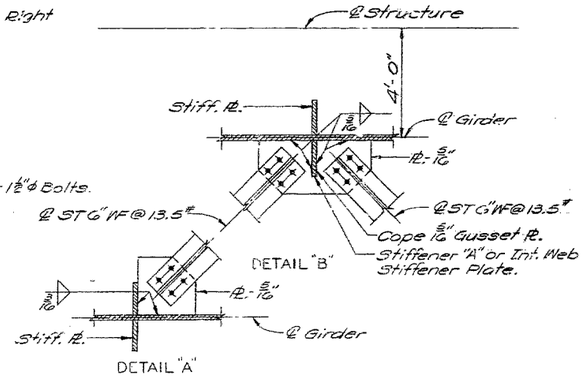

Note: For location of 5/16" Rt. See Sheet No. 12 of 17. Stiffener "A" to be used on interior girder where necessary for connection of lateral bracing.

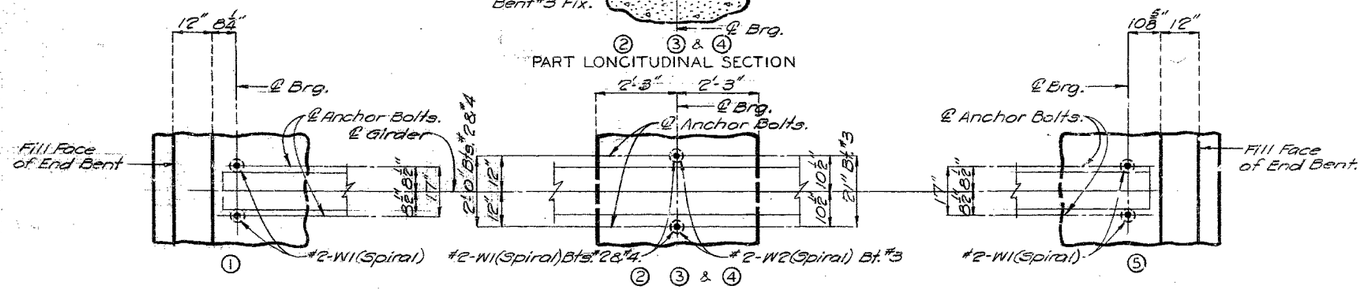

PART ANCHOR BOLT PLAN

Note: This drawing is not to scale. Follow dimensions.

BRIDGE OVER BLUE RIVER RD. & BLUE RIVER

STATE ROAD: INTERSTATE ROUTE 435

ABOUT 5.0 MILES NORTH OF MARTIN CITY

PROJECT NO. I-IG-435-1(53)X(RTE I-435) **STA.** 914+53.42 (LT. LANE) 914+63.08 (RT. LANE)

JACKSON **COUNTY**

A-610

DETAILED DEC. 1965 BY H. MILLER

CHECKED MARCH 1966 BY MOBERLY

Sheet No. 11 of 17.

167

MISSOURI STATE HIGHWAY DEPARTMENT

FED. ROAD DIST. NO.	STATE	FED. AID PROJ. NO.	FISCAL YEAR	SHEET NO.	TOTAL SHEETS
5	MO.		19	109	

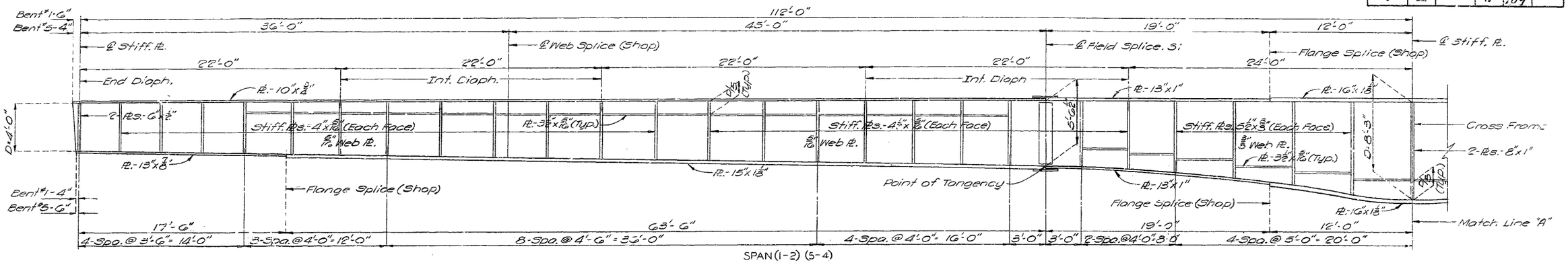

SPAN (1-2) (5-4)

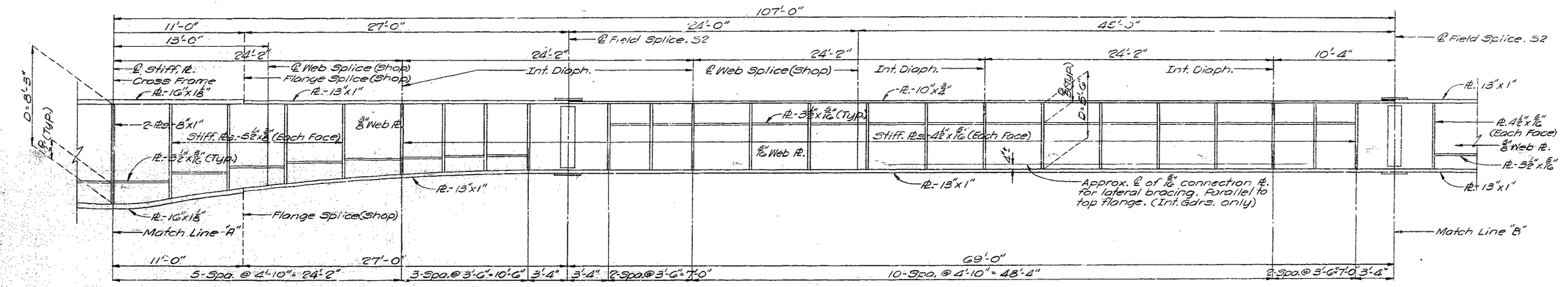

PART SPAN (2-3) (4-3)

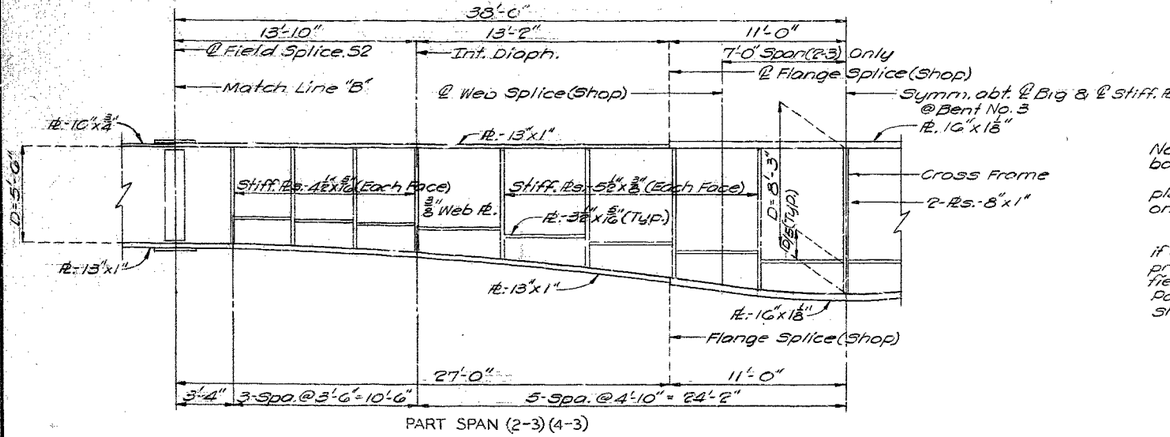

PART SPAN (2-3) (4-3)

ELEVATION OF GIRDERS
(Girder #1 shown, Girders #2, 3, 4, 5 & 6 similar.

Note: Transverse stiffener plates as shown on both sides of web, spaced as shown.
Longitudinal stiffener plates 3/8"x 5/16" to be placed on inside face of girders #1, 3, 4 & 6 and on the outside face of girders #2 & 5.
For details of field splices. See Sheet No. 13 of 17
The contractor may omit any shop flange splice, if desired, by extending the heavier flange plate and providing approved modifications of details at field flange splices and elsewhere as required. Payweight in any case will be based on material shown on design plans.

BRIDGE OVER BLUE RIVER RD. & BLUE RIVER
STATE ROAD: INTERSTATE ROUTE 435
ABOUT 5.0 MILES NORTH OF MARTIN CITY
PROJECT NO. I-IG-435-1 (53) (RTE. I-435) **STA.** 914+53.42 (LT. LANE) 914+63.08 (RT. LANE)
JACKSON **COUNTY**

168

DETAILED DEC. 1965 BY H. MILLER
CHECKED MARCH 1966 BY MOBERLY

Note: This drawing is not to scale. Follow dimensions.

Sheet No. 12 of 17.

A-610

MISSOURI STATE HIGHWAY DEPARTMENT

FED. ROAD DIST. NO.	STATE	FED. AID PROJ. NO.	FISCAL YEAR	SHEET NO.	TOTAL SHEETS
5	MO.		19	110	

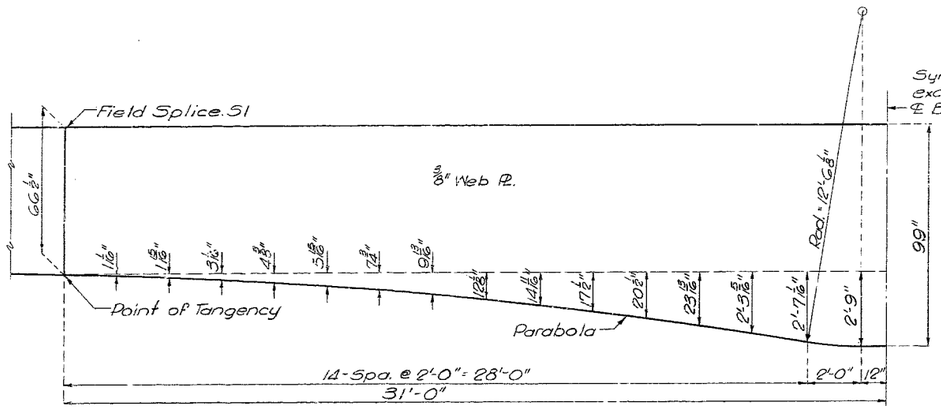

DETAIL OF GIRDER HAUNCH AT BENTS NO. 2 & 4 (END SPANS)

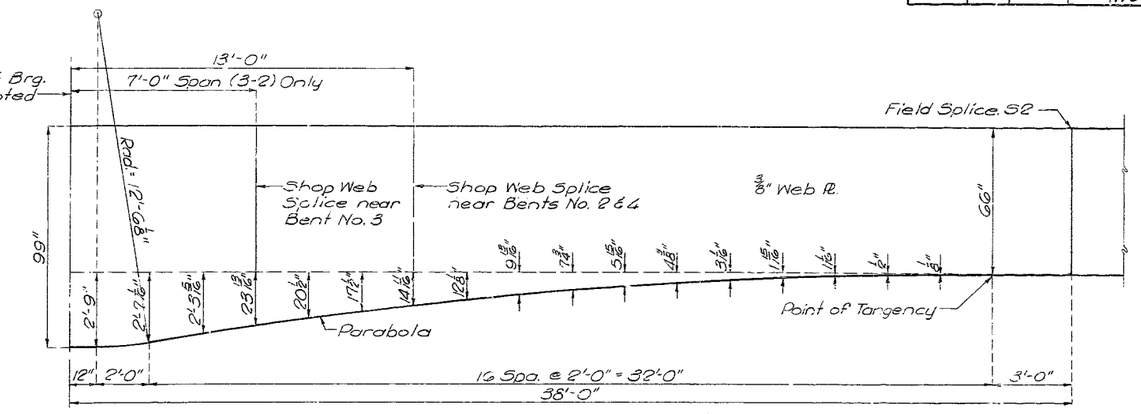

DETAIL OF GIRDER HAUNCH AT BENTS NO. 2 & 4 (INTERIOR SPANS) & NO. 3

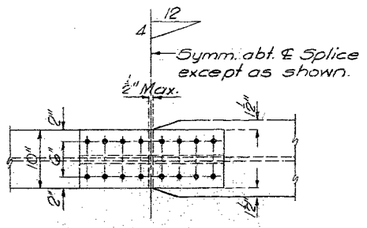

PLAN OF FLANGE SPLICE S1 & S2 (TOP)

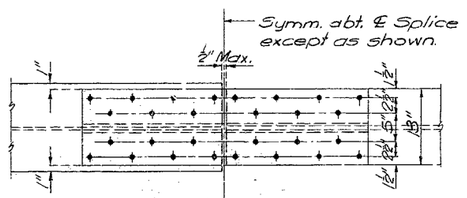

PLAN OF FLANGE SPLICE S1 (BOTTOM) (S2 SIMILAR)

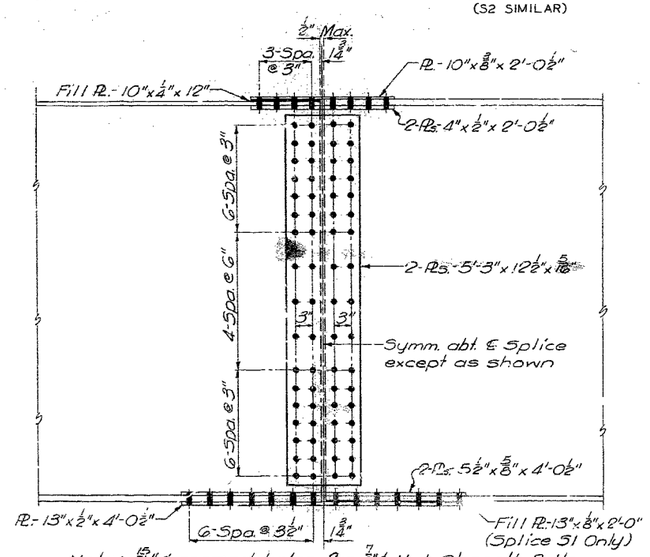

DETAILS OF FIELD SPLICE

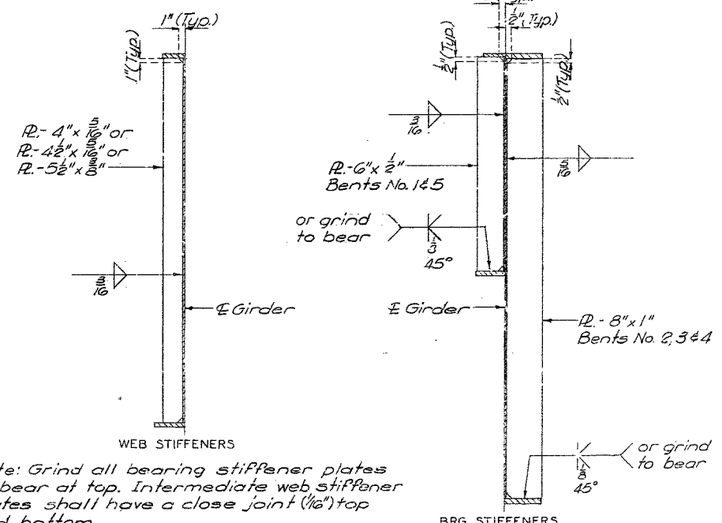

WEB STIFFENERS

BRG. STIFFENERS

Note: Grind all bearing stiffener plates to bear at top. Intermediate web stiffener plates shall have a close joint (1/16") top and bottom.

Fillet weld sizes greater than 3/16" may be reduced 1/16" if welding is done by submerged arc.

WELDING DETAILS

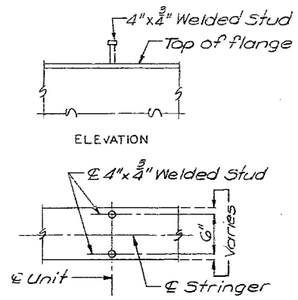

DETAIL OF SHEAR CONNECTORS

BRIDGE OVER BLUE RIVER RD. & BLUE RIVER

STATE ROAD: INTERSTATE ROUTE 435

ABOUT 5.0 MILES NORTH OF MARTIN CITY

PROJECT NO. I-IG-435-1(53) (RTE. I-435) **STA.** 914+53.42 (LT. LANE) 914+63.08 (RT. LANE)

JACKSON **COUNTY**

A-610

169

DETAILED JAN. 1966 **BY** WEAVER

CHECKED MARCH 1966 **BY** MOBERLY

Note: This drawing is not to scale. Follow dimensions.

MISSOURI STATE HIGHWAY DEPARTMENT

FED. ROAD DIST. NO.	STATE	FED. AID PROJ. NO.	FISCAL YEAR	SHEET NO.	TOTAL SHEETS
5	MO.		19	111	

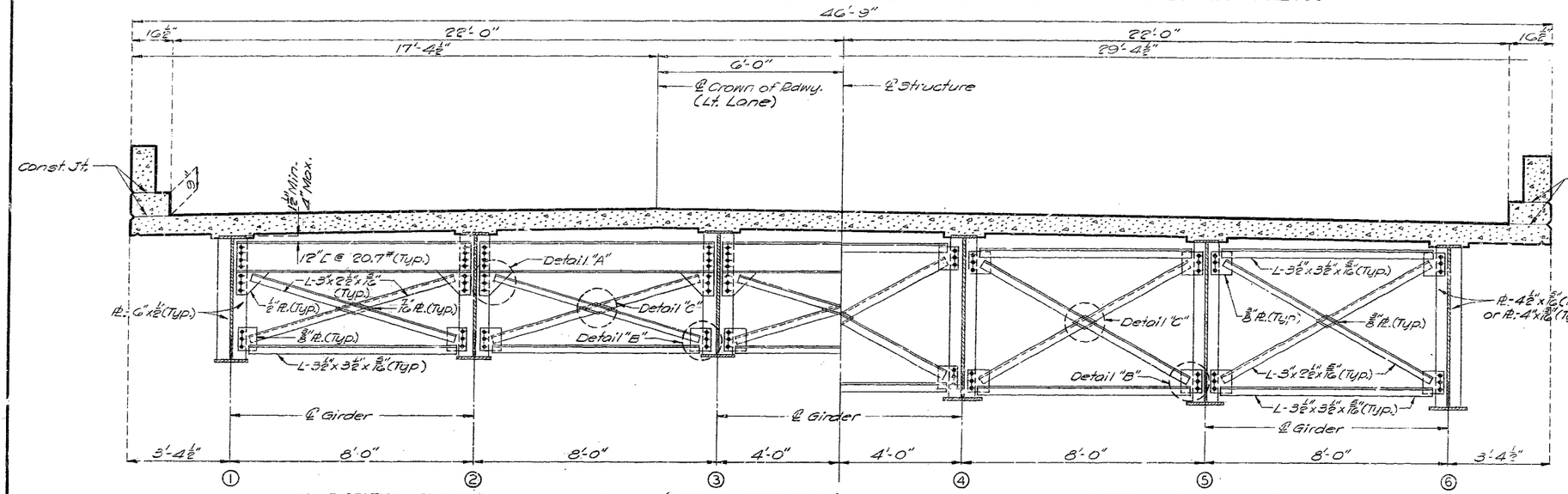

HALF SECTION AT END DIAPHRAGM BENT NO. 5 (SIMILAR AT BENT NO. 1)

HALF SECTION SHOWING INT. DIAPHRAGMS

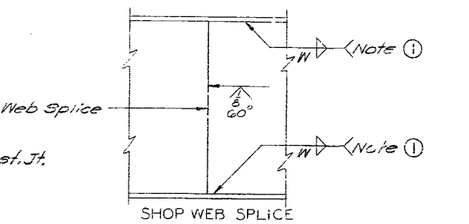

SHOP WEB SPLICE

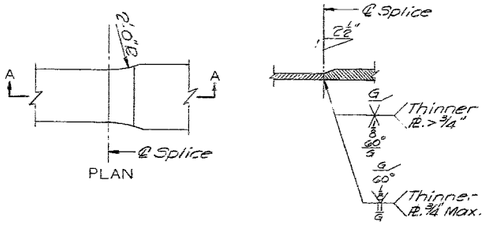

SECTION A-A

SHOP FLANGE SPLICE

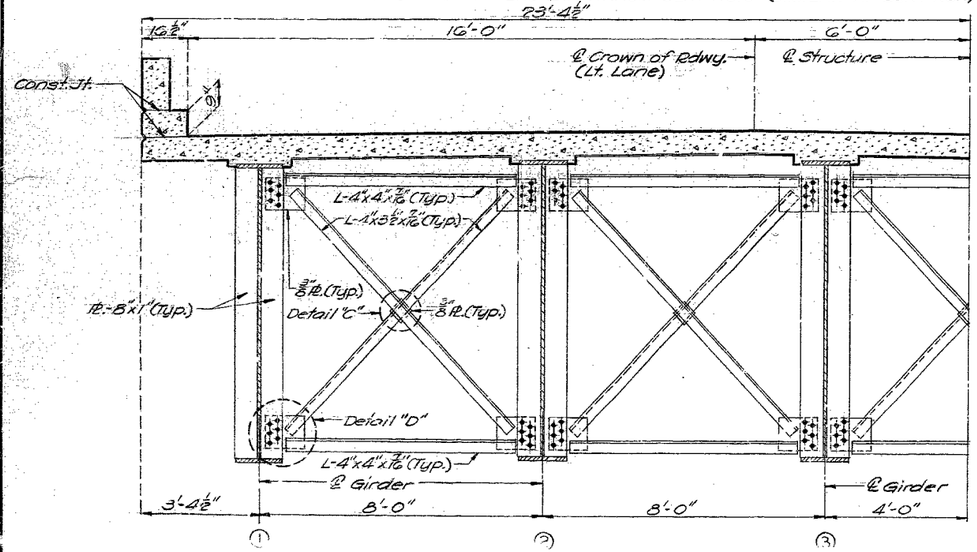

HALF SECTION SHOWING CROSS FRAME

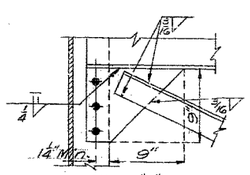

DETAIL "A"

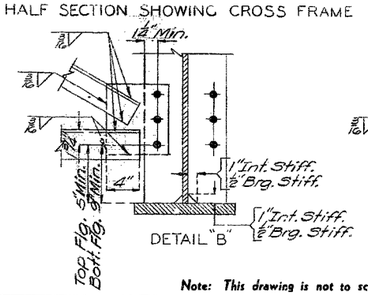

DETAIL "B"

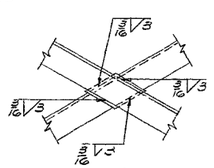

DETAIL "C"

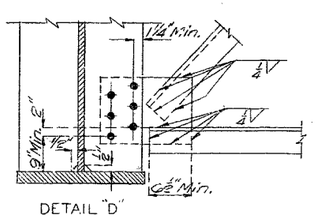

DETAIL "D"

RADIOGRAPHIC AND MAGNETIC PARTICLE INSPECTION

RADIOGRAPHIC:

SHOP: All butt welded flange plates, and not more than ⅓ of each girder web splice beginning at a point of maximum tension.

FIELD: None.

MAGNETIC PARTICLE

The following shop welds will be subject to inspection by the magnetic particle procedure, but this test procedure may also be used for the examination of weld passes and miscellaneous welds not specifically set out at the discretion of the engineer:

(A) At least 8" of every 10' length of weld and 8" of each weld less than 10' in length of each size and type of primary fillet weld of girders.

(B) Ten percent of secondary fillet welds on main members, fillet welds on secondary and bracing members and bearing shoes.

The tests shall be located at random in the members so as to be typical for each size and type of weld.

FIELD: None.

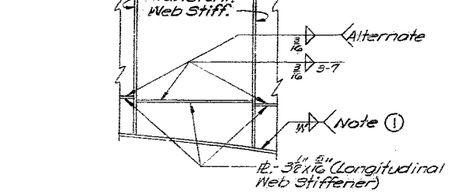

WEB STIFFENER

TABLE OF WELD SIZES	
FLANGE THICKNESS	W
To ½" inclusive	5/16
Over ½" to ¾"	¼
Over ¾" to 1½"	5/16

Note ①: Fillet weld size for flange to web welds when tandem fully automatic submerged arc process is used shall be 5/16" for material to ⅝" thick, ¼" for material ⅝" to ⅞" thick, and in accordance with AWS recommended weld sizes for material over ⅞" thick.

WELDING DETAILS

BRIDGE OVER BLUE RIVER RD. & BLUE RIVER

STATE ROAD: INTERSTATE ROUTE 435

ABOUT 5.0 MILES NORTH OF MARTIN CITY

PROJECT NO. I-IG-435-1(53)(RTE. I-435) **STA.** 914+53.42 (LT. LANE) 914+63.08 (RT. LANE)

JACKSON **COUNTY**

A-610

120

DETAILED DEC. 1965 BY H. MILLER

CHECKED MARCH 1966 BY MOBERLY

Note: This drawing is not to scale. Follow dimensions.

MISSOURI STATE HIGHWAY DEPARTMENT

FED. ROAD DIST. NO.	STATE	FED. AID PROJ. NO.	FISCAL YEAR	SHEET NO.	TOTAL SHEETS
5	MO		19	1/2	

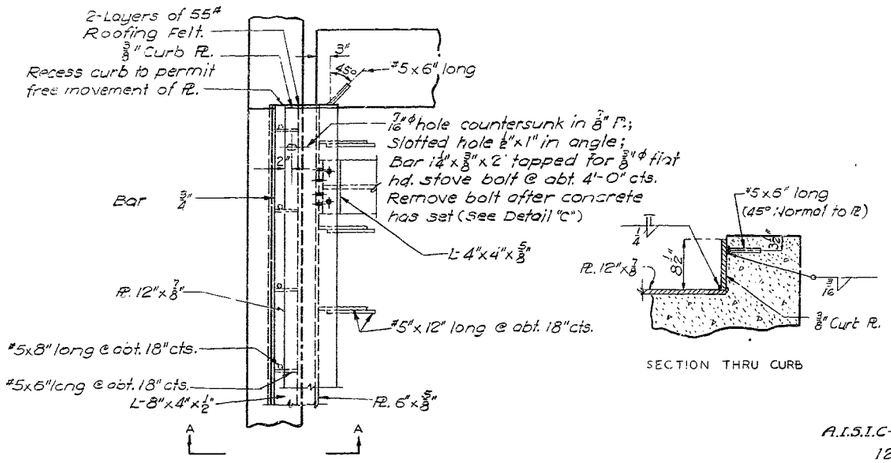

END BENT NO. 1 SHOWN
(End Bent No. 5 Similar)

SECTION THRU CURB

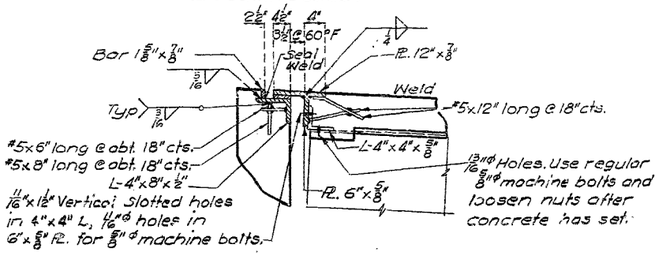

SECTION A-A

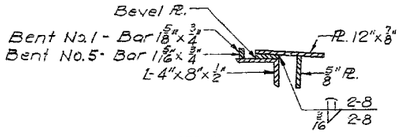

SECTION THRU EXPANSION DEVICE

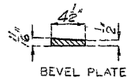

BEVEL PLATE

GENERAL NOTES:

Expansion Device shall be fabricated in one section except that when the length is over 40 feet splicing is permissible. The expansion device shall be bent to conform to crown and grade of roadway.

#5 Bars shall be structural grade. Approved stud welded anchors may be used in lieu of #5 bars shown.

Use two layers of 55# roofing felt between the sliding contact surface of curb plate and concrete backwall.

NOTES: TYPE "D" BEARINGS

Lead plates under bearings shall be approximately 1/8" thickness and weigh 8#/sq. ft. Cost of lead plates shall be included in price bid for other items. "Estimated weight" does not include weight of anchor bolts.

Rockers and pedestals shall be machined after welding.

Where flat surface is indicated, tolerance shall be .003 in/in in any direction.

Anchor Bolts for Expansion Bearings shall be 1 1/4"ϕ swedged bolts and shall extend 12" into concrete, with no nuts. Anchor bolts for Fixed Bearings shall be 1 1/2"ϕ swedged bolts and shall extend 15" into concrete with hexagon nuts and plain washers.

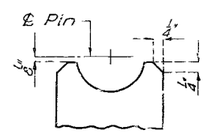

END VIEW OF WEB EXPANSION BEARING

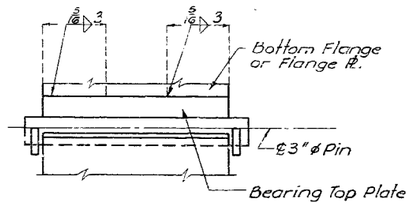

WELDING DETAILS

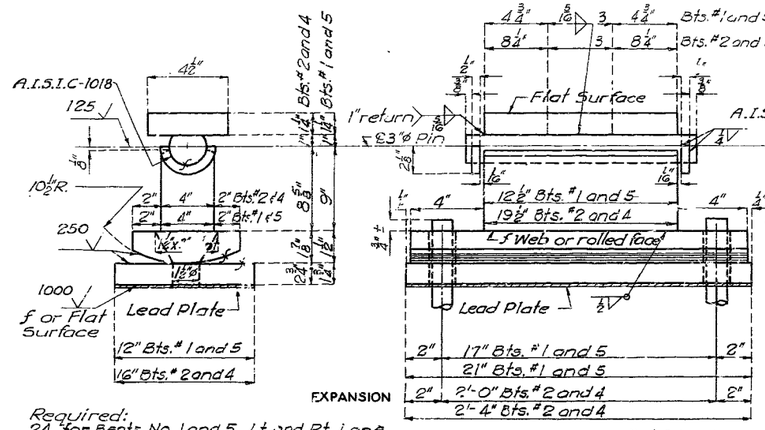

TYPE "D" BEARINGS
(Estimated Weight 79,390#)

Required:
24 for Bents No. 1 and 5 Lt. and Rt. Lane.
24 for Bents No. 2 and 4 Lt. and Rt. Lane.

Required: 12-for Bent No. 3 Lt. and Rt. Lane.

BRIDGE OVER BLUE RIVER ROAD AND BLUE RIVER

STATE ROAD: INTERSTATE ROUTE 435

ABOUT 5.0 MILES NORTH OF MARTIN CITY

PROJECT NO. I-G-435-1(53)(RTE. I-435) **STA.** 914+53.42 (LT. LANE)
914+63.08 (RT. LANE)

JACKSON **COUNTY**

A-610

DETAILED DEC. 1965 BY WOODS
CHECKED MARCH 1966 BY MOBERLY

Note: This drawing is not to scale. Follow dimensions.

17

MISSOURI STATE HIGHWAY DEPARTMENT

FED. ROAD DIST. NO.	STATE	FED. AID PROJ. NO.	FISCAL YEAR	SHEET NO.	TOTAL SHEETS
5	MO.		19	113	

Note: Longitudinal Reinforcing steel shall be placed so that ends shall not be more than 1" from 5/8" plate of Expansion Device.

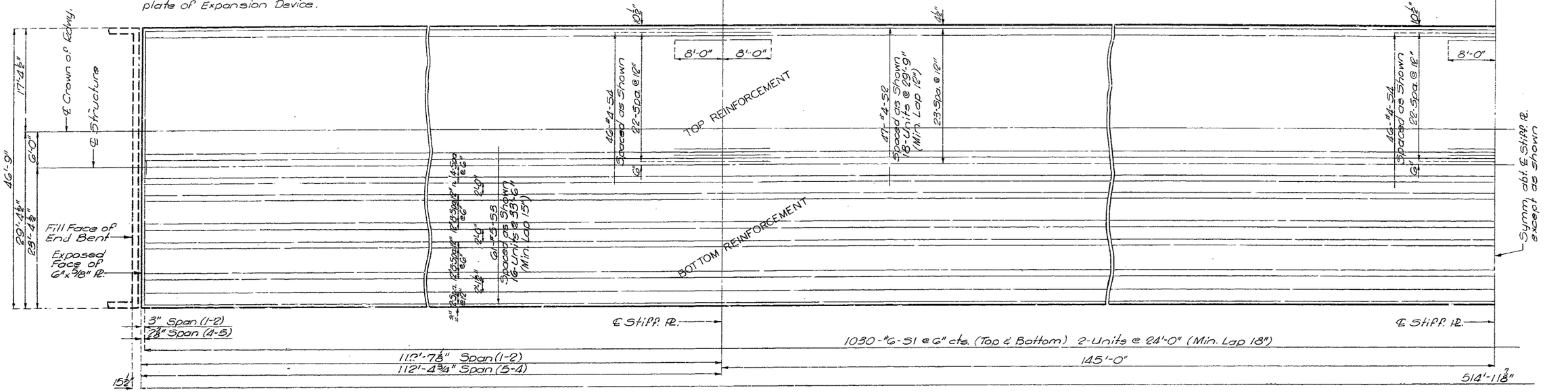

PLAN OF SLAB SHOWING REINFORCEMENT (LEFT LANE)

Note: For details of curb and handrail not shown see sheet No. 17 of 17.

Note: Longitudinal dimensions shown are taken parallel to grade at crown of roadway.

Plan of slab for right lane is oppisite hand laterally.

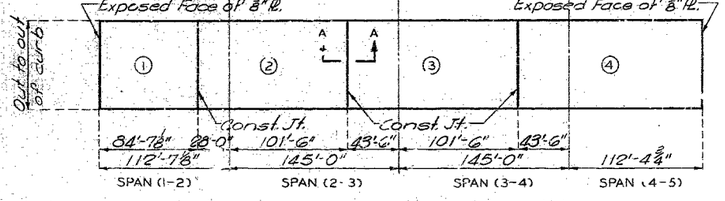

	Sequence of Pours Direction			
Basic Sequence	1 End to 2	2 1 to 3	3 2 to 4	4 3 to End
Alternate "A" Pours	1+2 End to 3		3 2 to 4	4 3 to End
Alternate "B" Pours	1+2 End to 3		3+4 2 to End	
Alternate "C" Pours	1+2+3+4 End to End			

Note: The contractor shall use an approved oscillating screed type, self-propelled mechanical finishing machine. He shall furnish an approved retarder to retard the set of the concrete to 2.5 hours and shall pour and satisfactorily finish the slab pours at a rate of not less than 44 cubic yards per hour. (See Standard Specification 411.8., for payment of retarder). He shall observe the basic pouring sequence unless he can demonstrate to the engineer that he can pour and satisfactorily finish one of the longer alternate pours. Finishing machine loads will not be permitted on concrete less than 48 hours old.

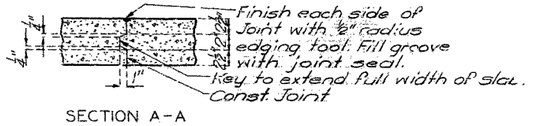

SECTION A-A

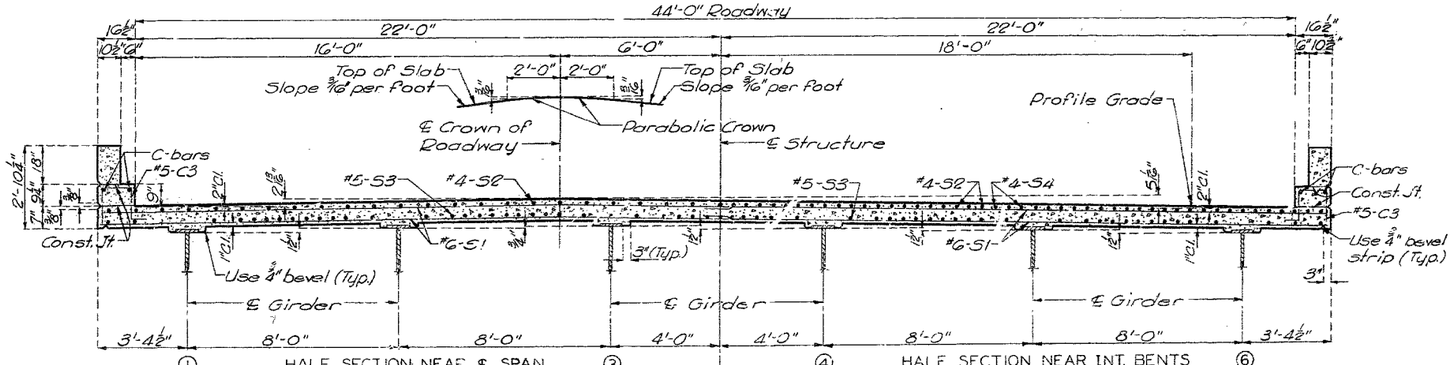

HALF SECTION NEAR ℄ SPAN

HALF SECTION NEAR INT. BENTS

Note: Left Lane structure shown in Half Sections. Right Lane structure is opposite hand.

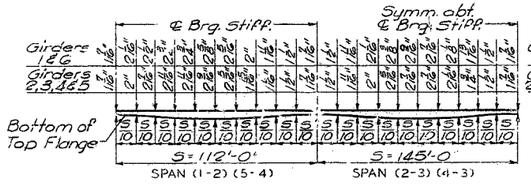

THEORETICAL SLAB HAUNCHING DIAGRAM

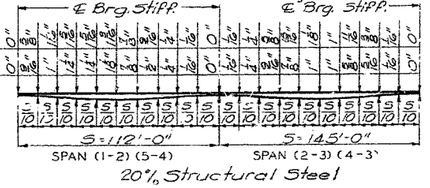

20% Structural Steel DEAD LOAD DEFLECTION

BRIDGE OVER BLUE RIVER RD. & BLUE RIVER

STATE ROAD: INTERSTATE ROUTE 435

ABOUT 5.0 MILES NORTH OF MARTIN CITY

PROJECT NO. I-IG-435-1(53)(RTE. I-435) **STA.** 914+53.42 (LT. LANE) 914+63.08 (RT. LANE)

JACKSON **COUNTY**

A-610

DETAILED DEC. 1965 BY WEAVER

CHECKED MARCH 1966 BY MOBERLY

Note: This drawing is not to scale. Follow dimensions.

Sheet No. 16 of 17.

172

MISSOURI STATE HIGHWAY DEPARTMENT

FED. ROAD DIST. NO.	STATE	FED. AID PROJ. NO.	FISCAL YEAR	SHEET NO.	TOTAL SHEETS
5	MO.		19	114	

GENERAL NOTES:

All handrail posts shall be set normal to grade.

Aluminum tube handrail shall be bent to conform to vertical and horizontal alignment of parapet.

Aluminum washer shims between top of parapet and post base may be used for adjusting handrail alignment. Maximum thickness of shims to be 1/8". Where more tilting of post is required for proper alignment, concrete bearing areas shall be ground down.

All parts of handrail, except anchor bolts, nuts, washers, and set screws are to be of aluminum material.

The contract unit price per linear foot of "Bridge Rail" shall include furnishing and erecting the handrail complete with anchor bolts, shims and Insulating compound.

All fillets 1/4" except as noted.

All drafts 3° except as noted.

Pipe rail to be fabricated in two or three panel lengths unless otherwise approved.

Omit set screw on side near filled joint in parapet at all expansion posts.

Top of curbs and parapets to be built parallel to grade with curb and parapet joints (except at end posts) normal to grade.

All exposed edges of end posts shall have 1/2" bevel. All exposed edges of curbs and parapets shall have 1/2" radius or 3/8" bevel.

If the contractor desires, he may use drive fit cast aluminum end caps in lieu of welded aluminum closure plates.

Integrally cast test coupons and a coat of clear lacquer specified in Std. Spec. 56.2.4 and 56.3.5 respectively will not be required for these rail posts.

Concrete end posts and ends of parapet and curbs at expansion gaps to be vertical.

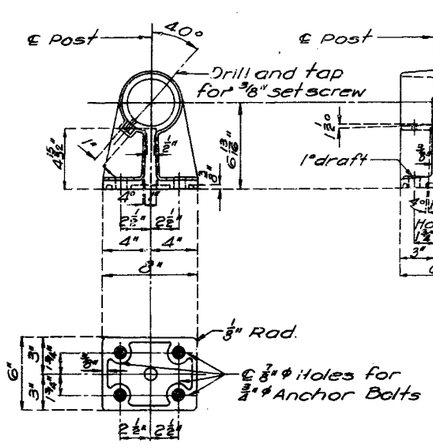

POST DETAILS

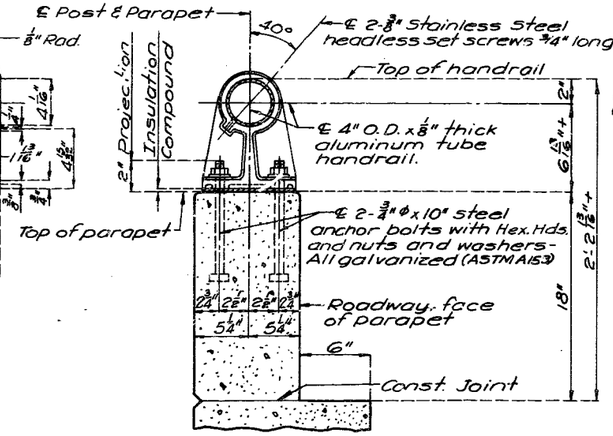

SECTION THRU HANDRAIL

SINGLE TUBE ALUMINUM RAILING

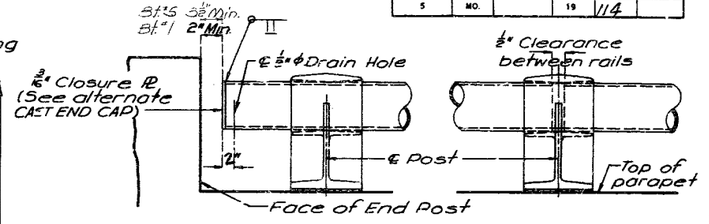

TYPICAL HANDRAIL DETAILS

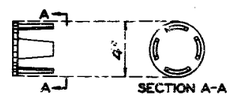

CAST END CAP
(Drive Fit Type)

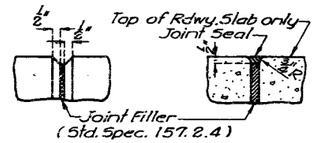

FILLED JOINT DETAILS

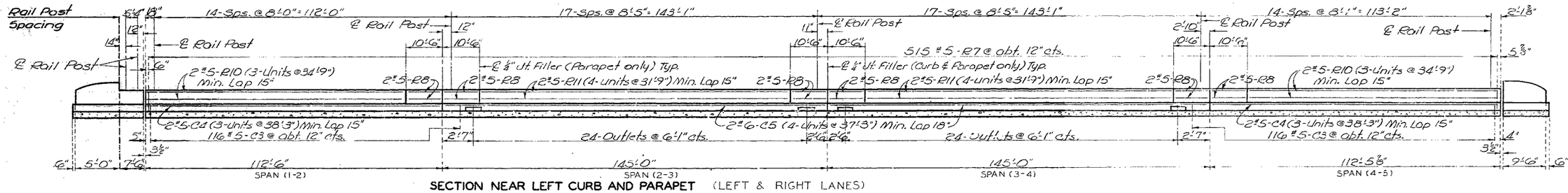

SECTION NEAR LEFT CURB AND PARAPET (LEFT & RIGHT LANES)

Note: For details of reinforcing not shown at ends of bridge see sheets No. 5 & 9 of 17.
Longitudinal dimensions shown are taken along top of parapet parallel to grade.

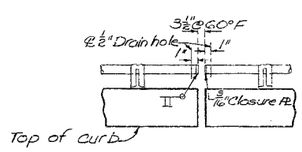

ELEVATION AT EXPANSION GAP - BENT NO. 1

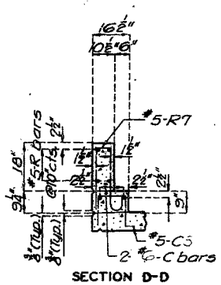

SECTION D-D

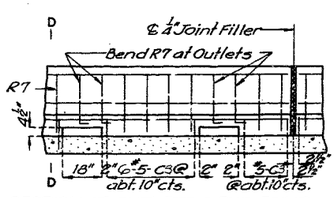

SECTION AT OUTLETS & EXP. JOINT
Note: Where there are no outlets use #5-C3 @ abt. 12" cts.

BRIDGE OVER BLUE RIVER RD. & BLUE RIVER

STATE ROAD: INTERSTATE ROUTE 435

ABOUT 5.0 MILES NORTH OF MARTIN CITY

PROJECT NO. I-IG-435-1(53)(RTE I-435) **STA.** 914+53.42 (LT. LANE) 914+63.08 (RT. LANE)

JACKSON **COUNTY**

A-010

Sheet No. 17 of 17

No.	Revised
15.2	Oct. 1965
Nov. 1963	

DETAILED JAN. 1966 **BY** ROBERDS
CHECKED MARCH 1966 **BY** MOBERLY

Note: This drawing is not to scale. Follow dimensions.

173

FINAL PLANS

MISSOURI STATE HIGHWAY DEPARTMENT

FINAL PLANS

FED. ROAD DIST. NO.	STATE	FED. AID PROJ. NO.	FISCAL YEAR	SHEET NO.	TOTAL SHEETS
5	MO.		19	98	

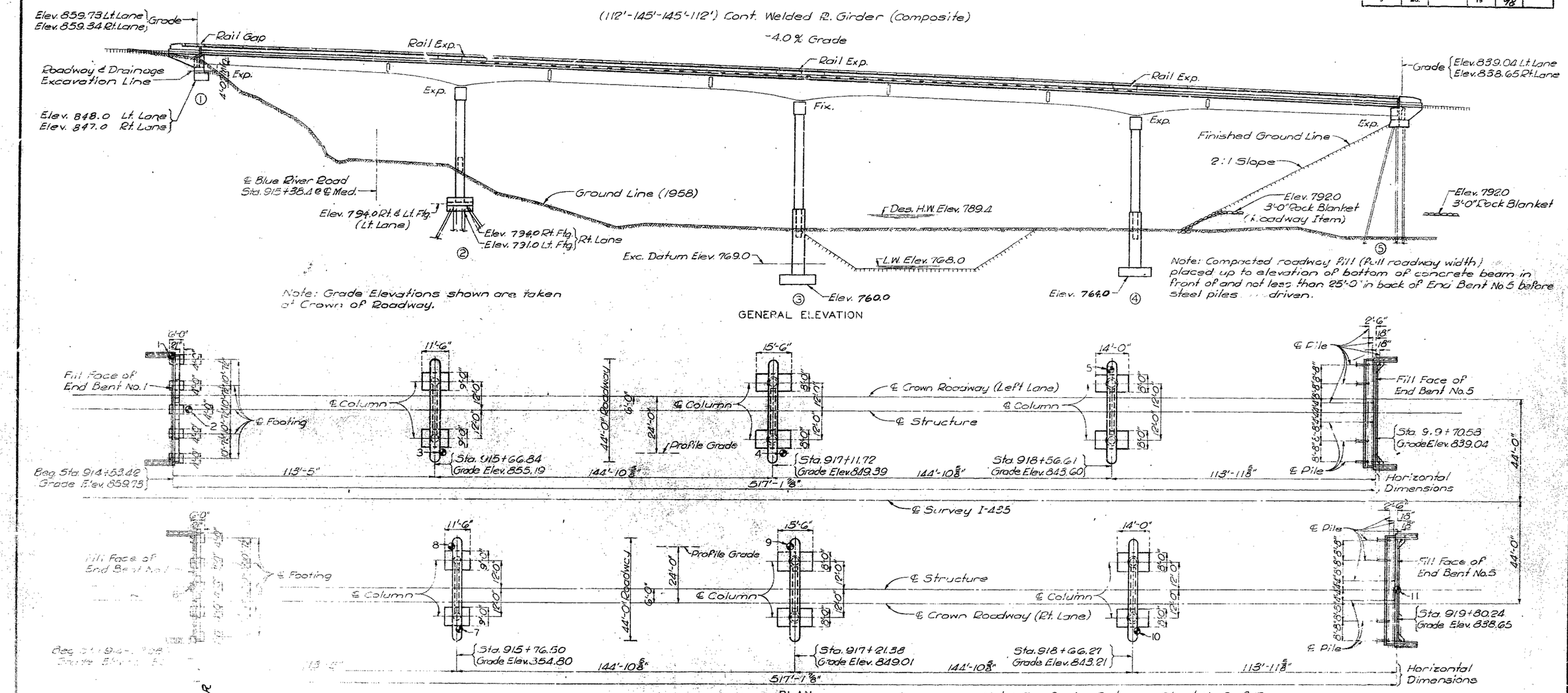

FINAL QUANTITIES

Item		Substr.	Superstr.	Total
Class 1 Excavation for Structures	Cu.Yd.	1357.0		1357.0
Class 2 Excavation for Structures	Cu.Yd.	352.0		352.0
Steel Piles in Place (10")	Lin.Ft.	1783		1783
Steel Pile Cut-offs (10")	Lin.Ft.	167		167
Class B Concrete	Cu.Yd.	1070.9		1070.9
Class B1 Concrete	Cu.Yd.		1291.6	1291.6
Reinforcing Steel	Lb.	137,060	437,110	574,170
Painting	Ton		645.5	645.5
Fabricated Structural Carbon Steel	Lb.		1297870	1297,870
Bridge Rail (Single tube type)	Lin.Ft.		2,089	2,089
Cont. Items: Class 1 Exc. +25%	Cu. Yd.	26.0		26.0
Test Holes	Lin. Ft.	150		150
Bridge Anchors 6"	Each	5		5

Note: Concrete and reinforcing in end posts, parapets and curbs on end bents is included with Superstructure Quantities. No payment allowed for excavation at End Bent 5.

B.M. # P.K. Nail Rt Wing Bt 1 Lt Lane
Elev. 860.63

FINISHED

BRIDGE OVER BLUE RIVER RD. & BLUE RIVER

STATE ROAD: INTERSTATE ROUTE 435

ABOUT 5.0 MILES NORTH OF MARTIN CITY

PROJECT NO. I-IG-435-1(53)(RTE. I-435) **STA.** 914+53.42 (LT. LANE) 914+63.08 (RT. LANE)

JACKSON **COUNTY**

FINISHED

SUBMITTED BY D. B. Jenkins BRIDGE ENGINEER DATE 5/20/66

APPROVED BY M. J. Snider CHIEF ENGINEER DATE 5/20/66

FINISHED

STD. 54.00

A-610

DESIGNED DEC 1965 BY STOFSELL
DETAILED JAN 1966 BY WEAVER
CHECKED MARCH 1966 BY MOBERLY

Note: This drawing is not to scale. Follow dimensions.

Sheet No. 1A of 5.

FINAL PLANS

MISSOURI STATE HIGHWAY DEPARTMENT

FINAL PLANS

FED. ROAD DIST. NO.	STATE	FED. AID PROJ. NO.	FISCAL YEAR	SHEET NO.	TOTAL SHEETS
5	MO.		19	98	

(112'-145'-145'-112') Cont. Welded Pl. Girder (Composite)

-4.0% Grade

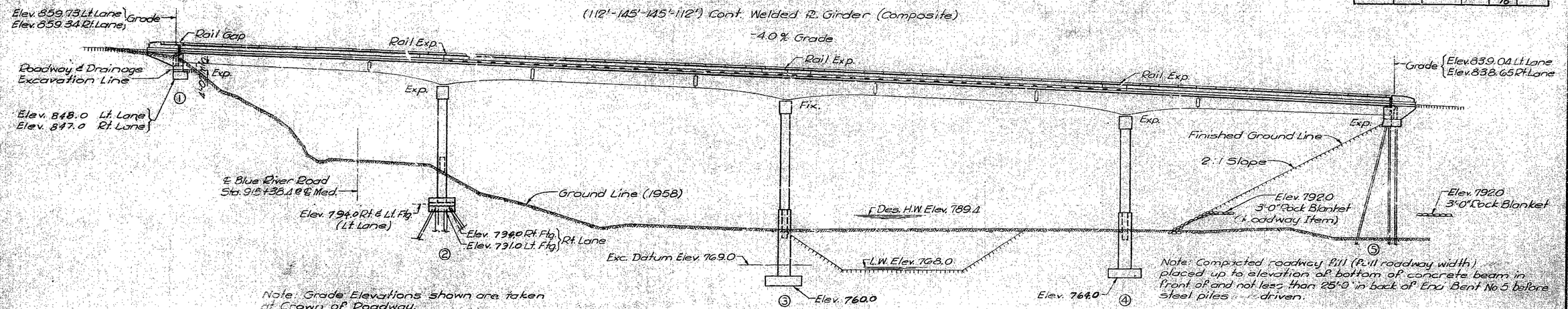

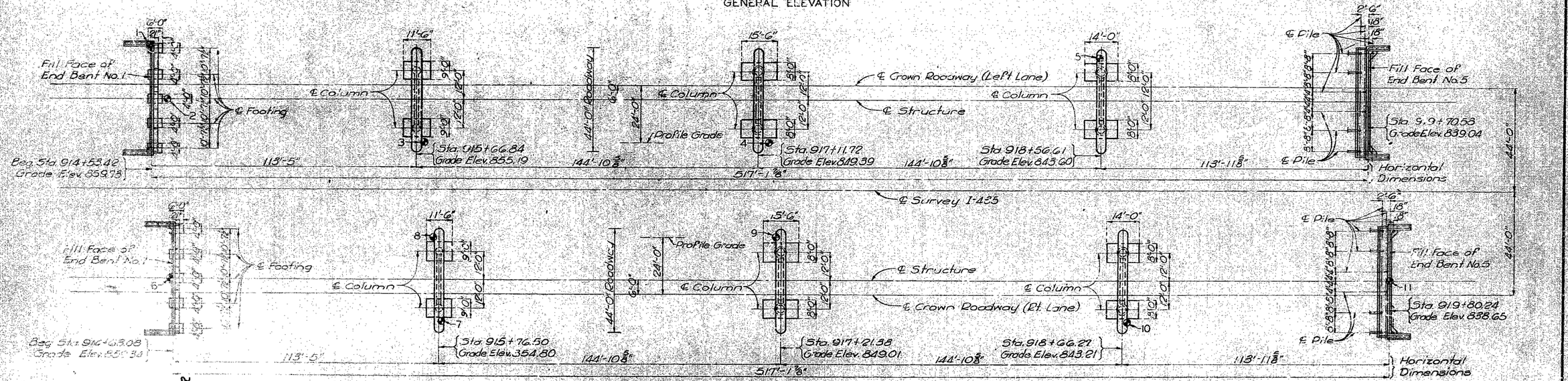

Note: For Boring Data see Sheet No. 2 of 17
"⊕" Indicates location of boring.

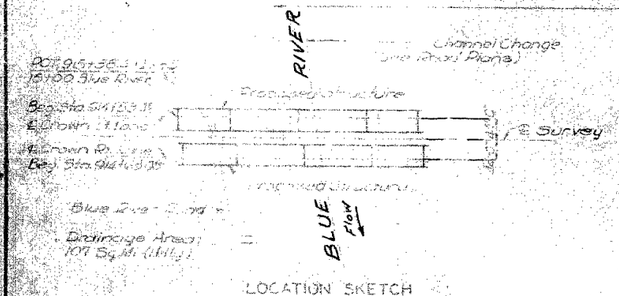

FINAL QUANTITIES

Item		Substr.	Superstr.	Total
Class 1 Excavation for Structures	Cu.Yd.	1357.0		1357.0
Class 2 Excavation for Structures	Cu.Yd.	352.0		352.0
Steel Piles in Place (10")	Lin.Ft.	1783		1783
Steel Pile Cut-offs (10")	Lin.Ft.	167		167
Class B Concrete	Cu.Yd.	1070.9		1070.9
Class B1 Concrete	Cu.Yd.		1291.6	1291.6
Reinforcing Steel	Lb.	137,060	437,110	574,170
Painting	Ton		645.5	645.5
Fabricated Structural Carbon Steel	Lb.		1,297,870	1,297,870
Bridge Rail (Single tube type)	Lin.Ft.		2,089	2,089
Cont. Items: Class 1 Exc. +25%	Cu.Yd.	26.0		26.0
Test Holes	Lin.Ft.	150		150
Bridge Anchors 6'	Each	5		5

Note: Concrete and reinforcing in end posts, parapets and curbs on end bents is included with superstructure quantities. No payment allowed for excavation at End Bent 5.

B.M.'s P.K. Nail Rt Wing Bt 1 Lt Lane Elev. 860.63 FINISHED

BRIDGE OVER BLUE RIVER RD. & BLUE RIVER

STATE ROAD: INTERSTATE ROUTE 435

ABOUT 5.0 MILES NORTH OF MARTIN CITY

PROJECT NO. HG-435-1(53)(RTE. I-435) **STA.** 914+53.42 (LT. LANE) 914+63.08 (RT. LANE)

JACKSON **COUNTY**

FINISHED

SUBMITTED BY D.B. Jenkins BRI. ENGINEER DATE 5/20/66

APPROVED BY W.J. Linder CHIEF ENGINEER DATE 5/20/66

FINISHED

STD. 54.00

A-610

DESIGNED DEC. 1965 BY STORSLETT
DETAILED JAN. 1966 BY WEAVER
CHECKED MARCH 1966 BY MOBERLY

Note: This drawing is not to scale. Follow dimensions.

Sheet No. 1 of 5.

MISSOURI STATE HIGHWAY DEPARTMENT

FINAL PLANS

FED ROAD DIST. NO	STATE	FED AID PROJ. NO.	FISCAL YEAR	SHEET NO.	TOTAL SHEETS
5	MO.		19	101	

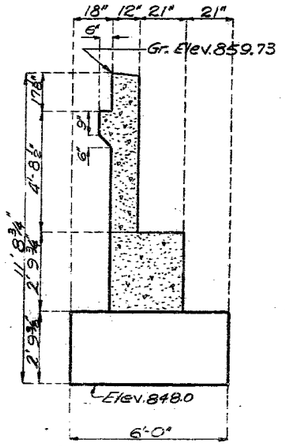

SECTION NEAR CROWN OF ROADWAY

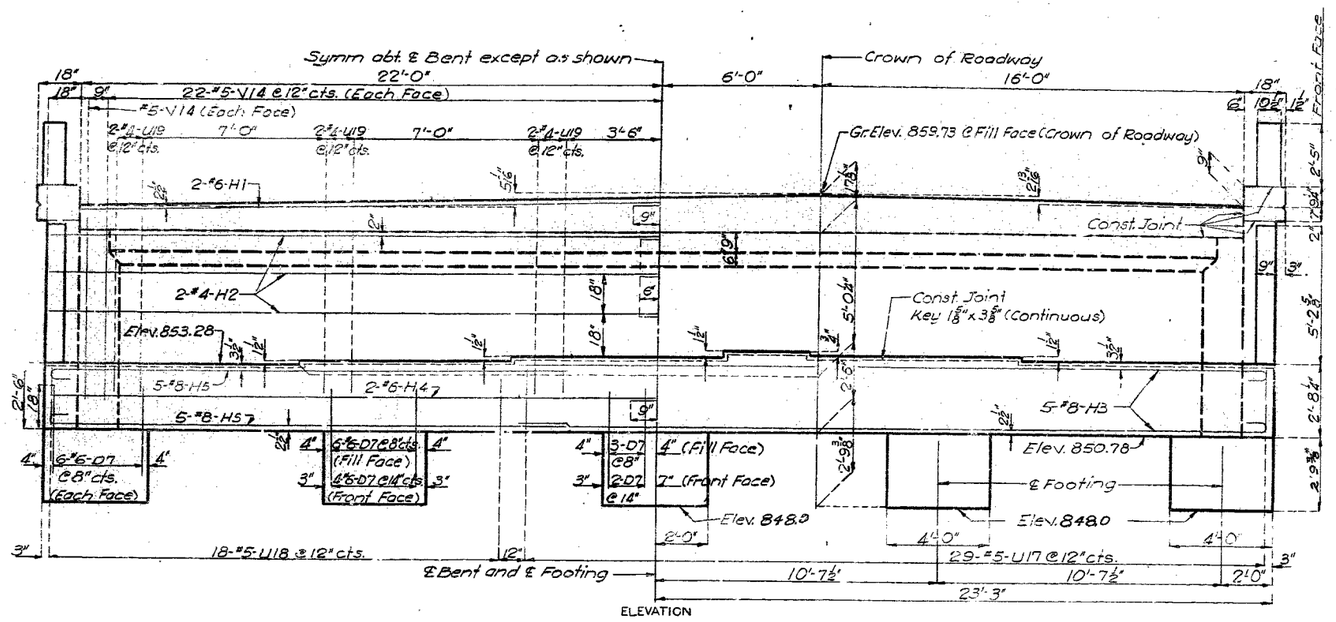

ELEVATION

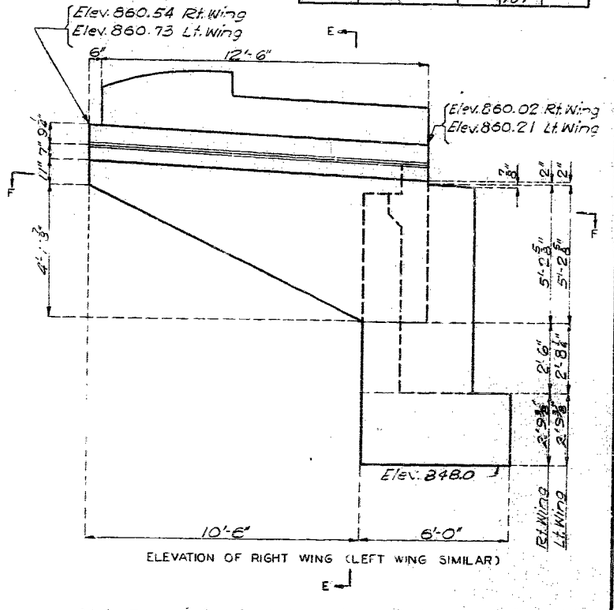

ELEVATION OF RIGHT WING (LEFT WING SIMILAR)

Note: For reinforcing steel not shown in elevation of wings and section near crown of roadway, see sheet No. 5 of 17
For elevation of end post, end post ordinates, section E-E and section F-F see sheet No. 5 of 17.

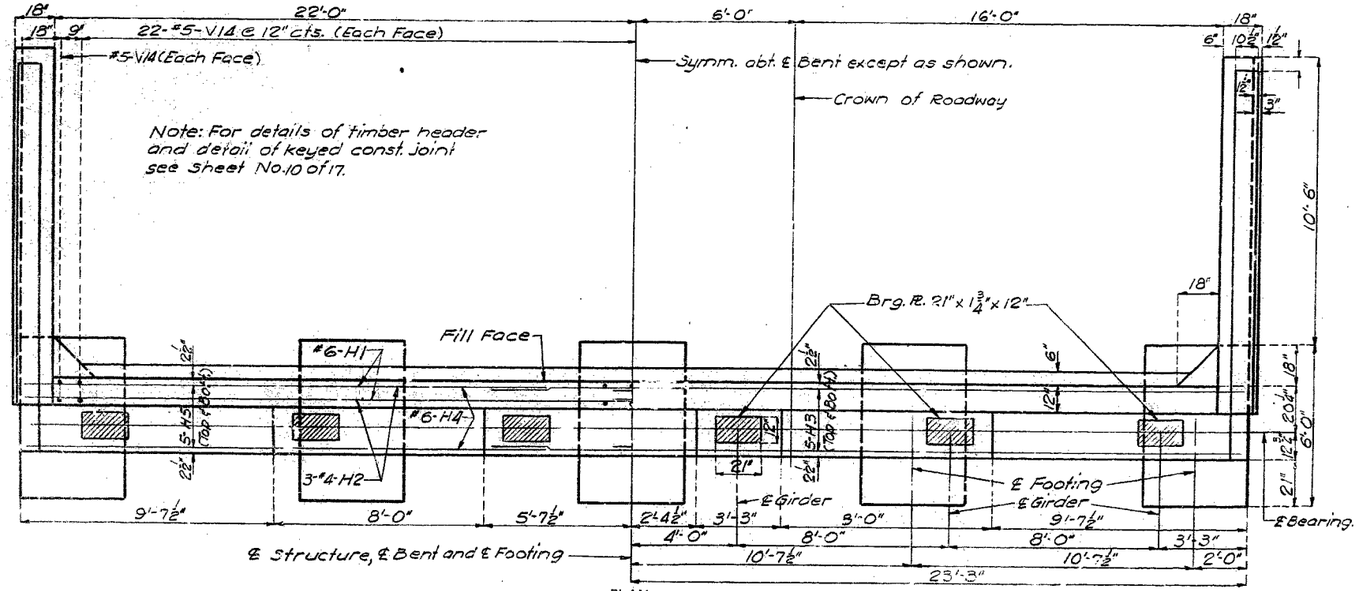

PLAN

DETAILS OF END BENT NO. 1
LEFT LANE

Note: Fill at end bent No. 1 left lane was not carried above bottom of beam and wings until adjacent superstructure span was in place.

Top of backwall and expansion device for end bent No. 1 left lane to conform to crown of roadway.

Backwall above upper construction joint was not poured until the structural steel of the expansion device had been installed and slab had been poured in adjacent span.

Note: This drawing is not to scale. Follow dimensions.

Sheet No. 4A of 5.

DETAILED JAN. 1966 BY WOODS
CHECKED MARCH 1966 BY MOBERLY

FINISHED

BRIDGE OVER BLUE RIVER ROAD AND BLUE RIVER

STATE ROAD: INTERSTATE ROUTE 435

ABOUT 5.0 MILES NORTH OF MARTIN CITY

PROJECT NO. I-IG-435-1(53)(RTE. I-435) **STA.** 914+53.42 (LT. LANE) 914+63.08 (RT. LANE)

JACKSON FINISHED **COUNTY** FINISHED

A-610

175

MISSOURI STATE HIGHWAY DEPARTMENT

FINAL PLANS

FED. ROAD DIST. NO.	STATE	FED. AID PROJ. NO.	FISCAL YEAR	SHEET NO.	TOTAL SHEETS
5	MO.		19	102	

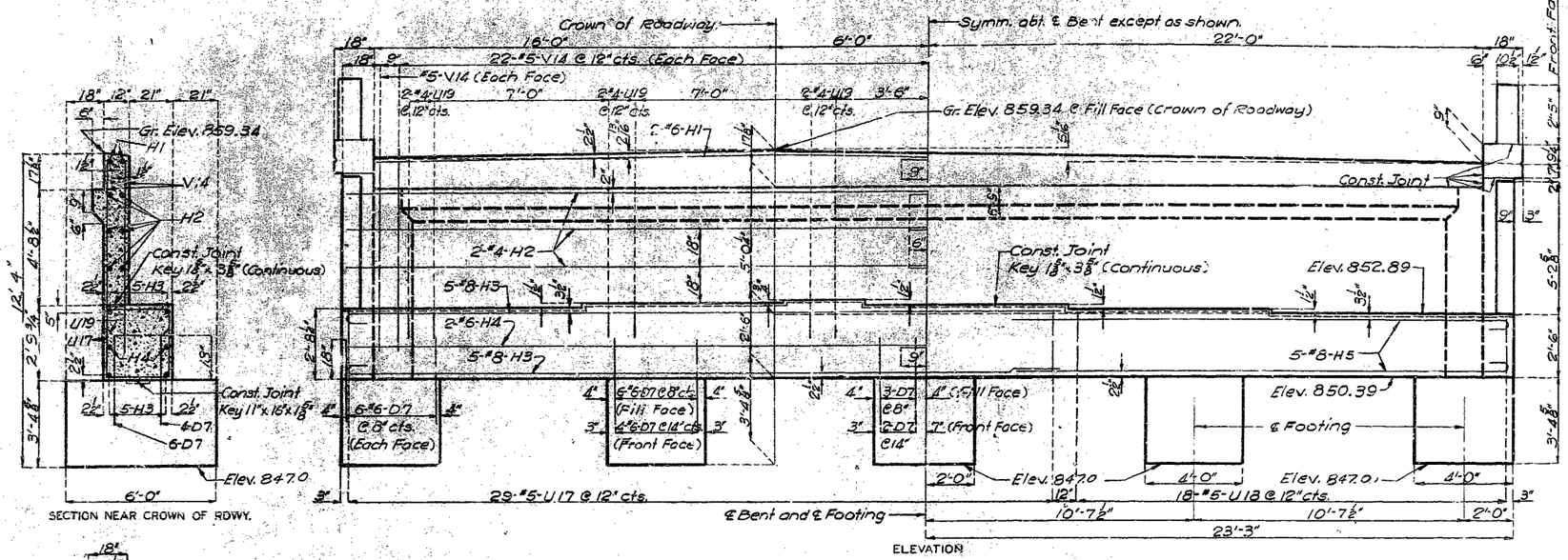

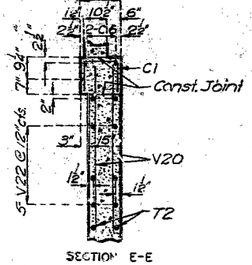

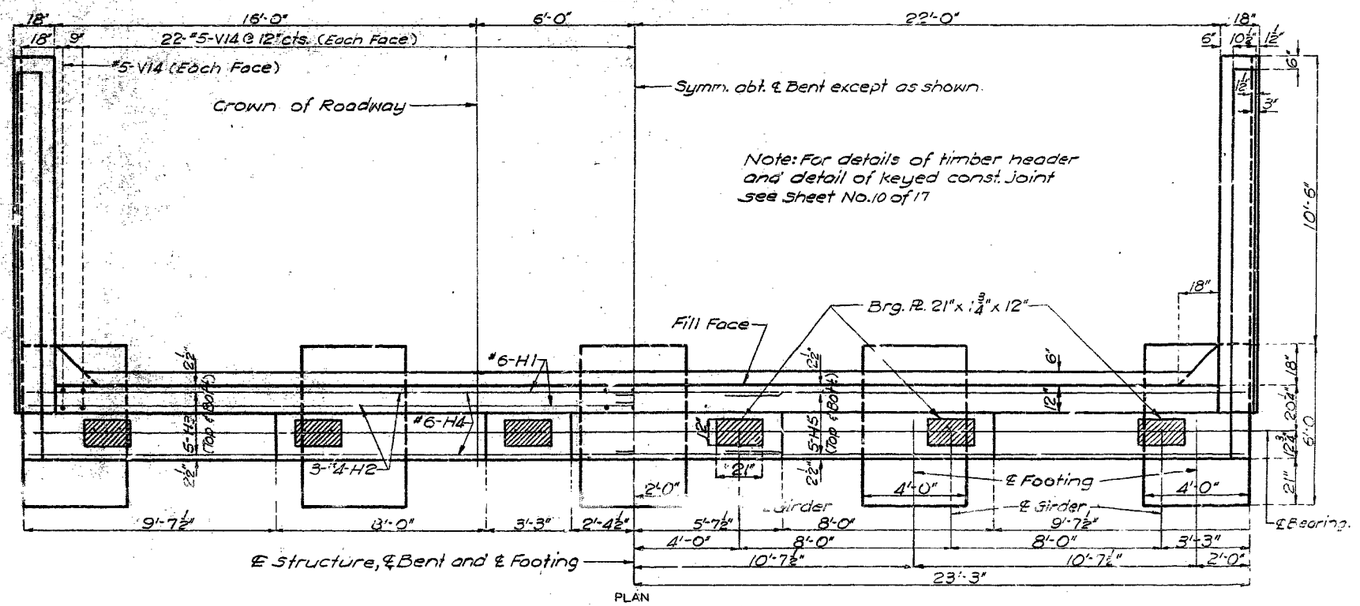

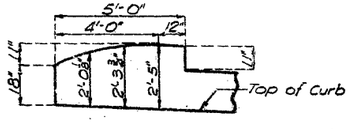

DETAILS OF END BENT NO. 1
RIGHT LANE

Note: Fill at end bent No. 1 right lane is not carried above bottom of beam and wings until adjacent superstructure spans are in place.

Top of backwall and expansion device for end bent No. 1 right lane to conform to crown of roadway.

Backwall above upper construction joint is not poured until the structural steel of the expansion device has been installed and slab has been poured in adjacent span.

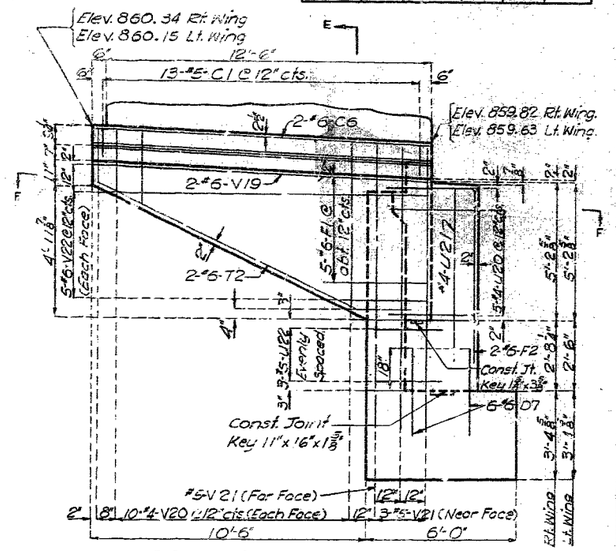

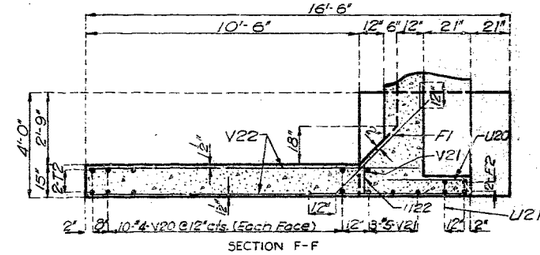

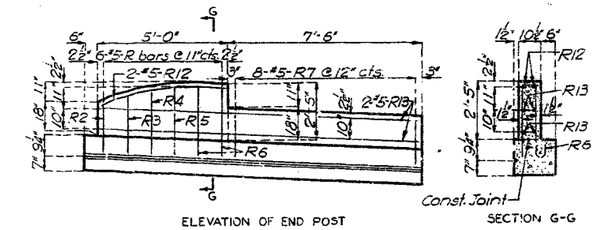

BRIDGE OVER BLUE RIVER ROAD AND BLUE RIVER

STATE ROAD: INTERSTATE ROUTE 435

ABOUT 5.0 MILES NORTH OF MARTIN CITY

PROJECT NO. I-IG-435-1(53)(RTE. I-435) **STA.** 914+53.42 (LT. LANE) 914+63.08 (RT. LANE)

JACKSON COUNTY

A-610

DETAILED JAN. 1966 BY WOODS
CHECKED MARCH 1966 BY MOBERLY

Note: This drawing is not to scale. Follow dimensions.

Sheet No. 5A of 5.

FINAL PLANS

MISSOURI STATE HIGHWAY DEPARTMENT

FINAL PLANS

FED. ROAD DIST. NO.	STATE	FED. AID PROJ. NO.	FISCAL YEAR	SHEET NO.	TOTAL SHEETS
5	MO.		19	103	

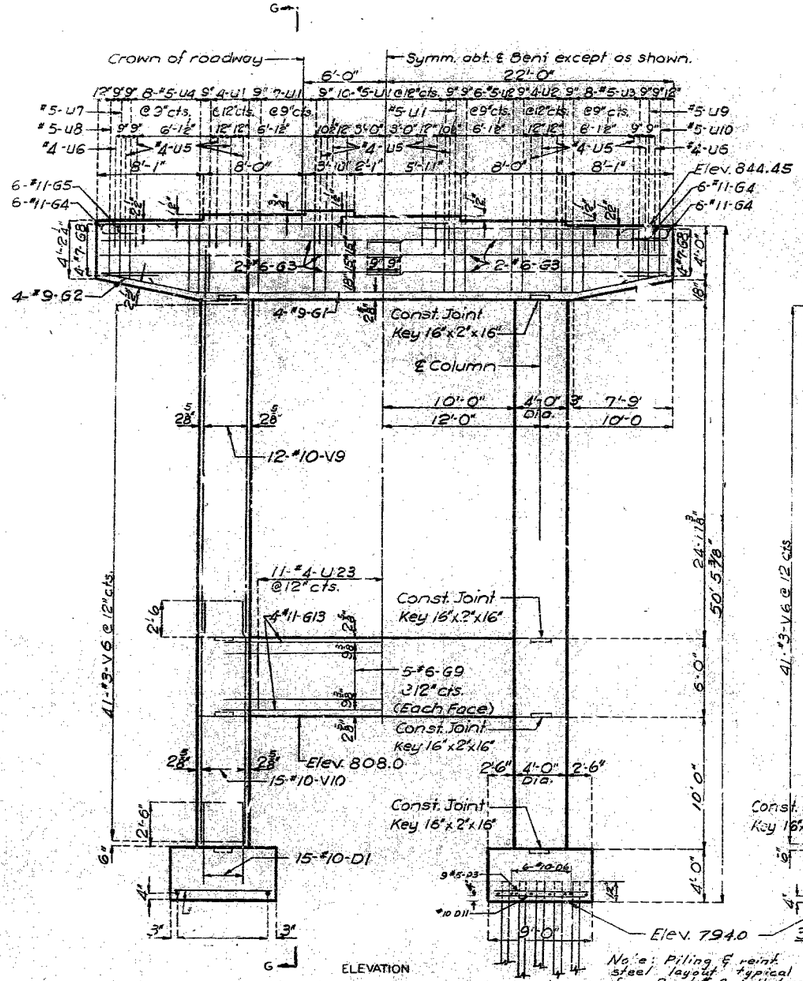

DETAILED DEC. 1965 BY WOODS

CHECKED MARCH 1966 BY MOBERLY

Note: This drawing is not to scale. Follow dimensions.

Sheet No. Ghot 5.

BRIDGE OVER BLUE RIVER ROAD AND BLUE RIVER

STATE ROAD: INTERSTATE ROUTE 435

ABOUT 5.0 MILES NORTH OF MARTIN CITY

PROJECT NO. I-HG-435-1(53)XRTE. I-435) **STA.** 914+53.42 (LT. LANE) 914+63.08 (RT. LANE)

JACKSON FINISHED COUNTY FINISHED

A-610

FINAL PLANS

MISSOURI STATE HIGHWAY DEPARTMENT

FINAL PLANS

FED. ROAD DIST. NO.	STATE	FED. AID PROJ. NO.	FISCAL YEAR	SHEET NO.	TOTAL SHEETS
5	MO.		19	104	

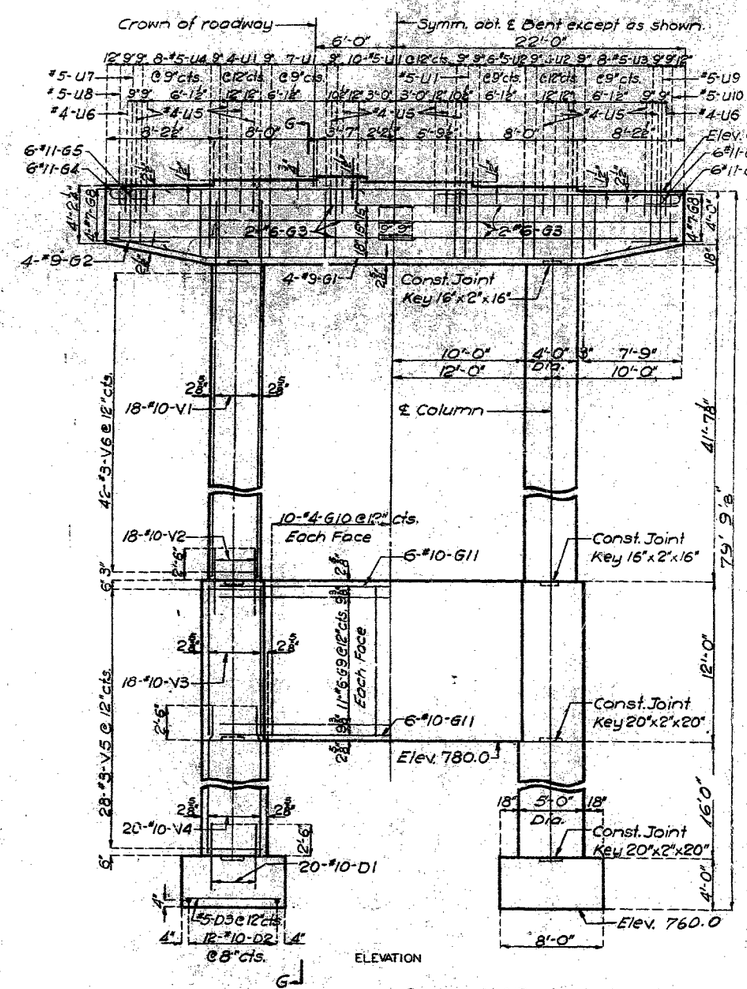

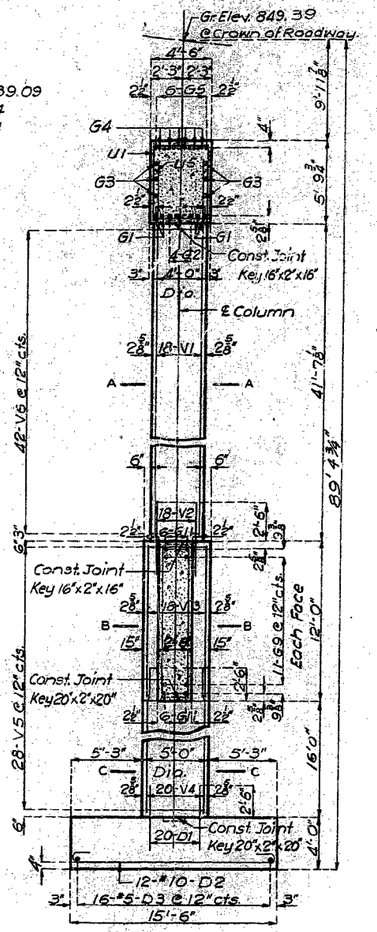

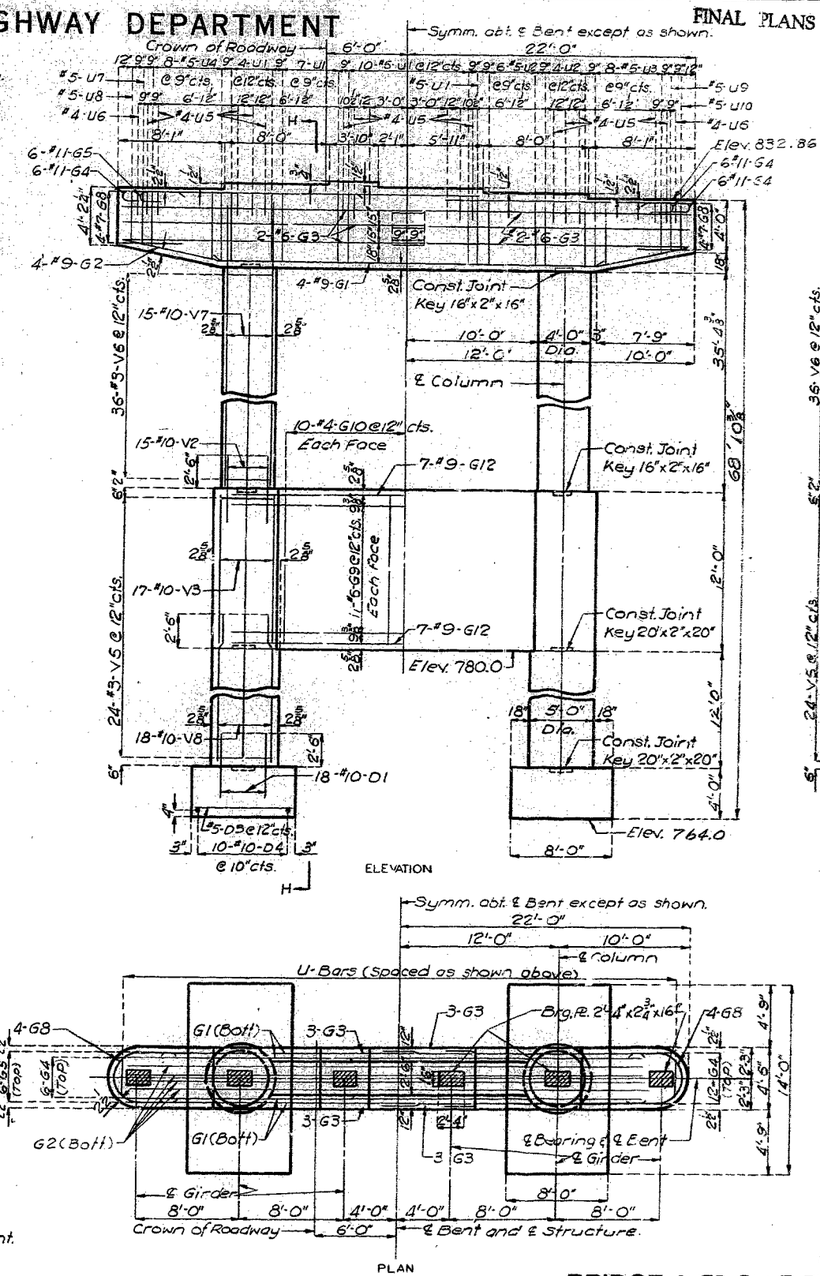

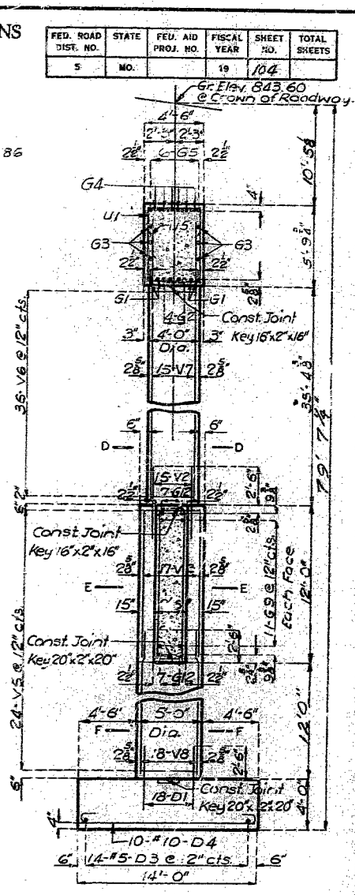

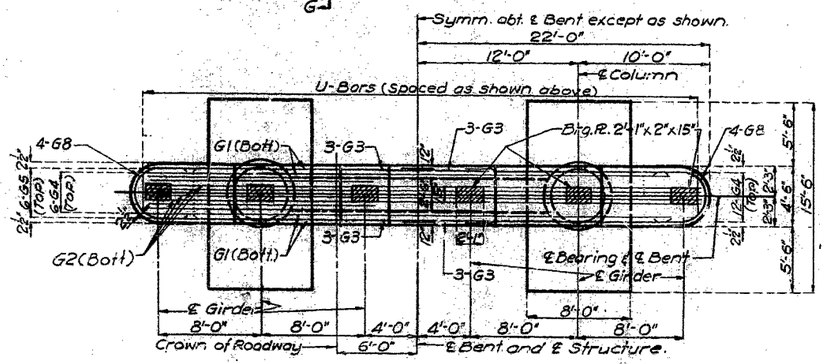

DETAILS OF INT. BENT NO. 3
LEFT LANE

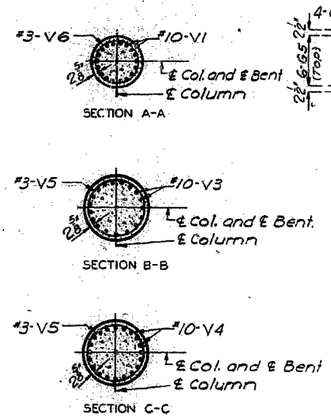

DETAILS OF INT. BENT NO. 4
LEFT LANE

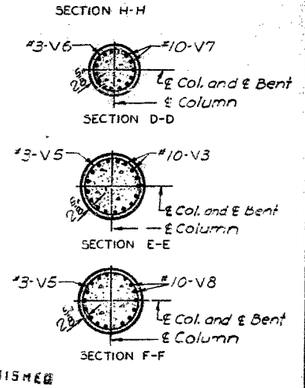

FINISHED

BRIDGE OVER BLUE RIVER ROAD AND BLUE RIVER

STATE ROAD: INTERSTATE ROUTE 435

ABOUT 5.0 MILES NORTH OF MARTIN CITY

PROJECT NO. I-IG-435-1(53)(RTE. I-435) **STA.** 914+53.42 (LT. LANE) 914+63.08 (RT. LANE)

JACKSON FINISHED **COUNTY** FINISHED

DETAILED DEC. 1965 BY WOODS
CHECKED MARCH 1966 BY MOBERLY

Note: This drawing is not to scale. Follow dimensions.

Sheet No. 7A of 50

A-610

128

MISSOURI STATE HIGHWAY DEPARTMENT

FED. ROAD DIST. NO.	STATE	FED. AID PROJ. NO.	FISCAL YEAR	SHEET NO.	TOTAL SHEETS
5	MO.		13	105	

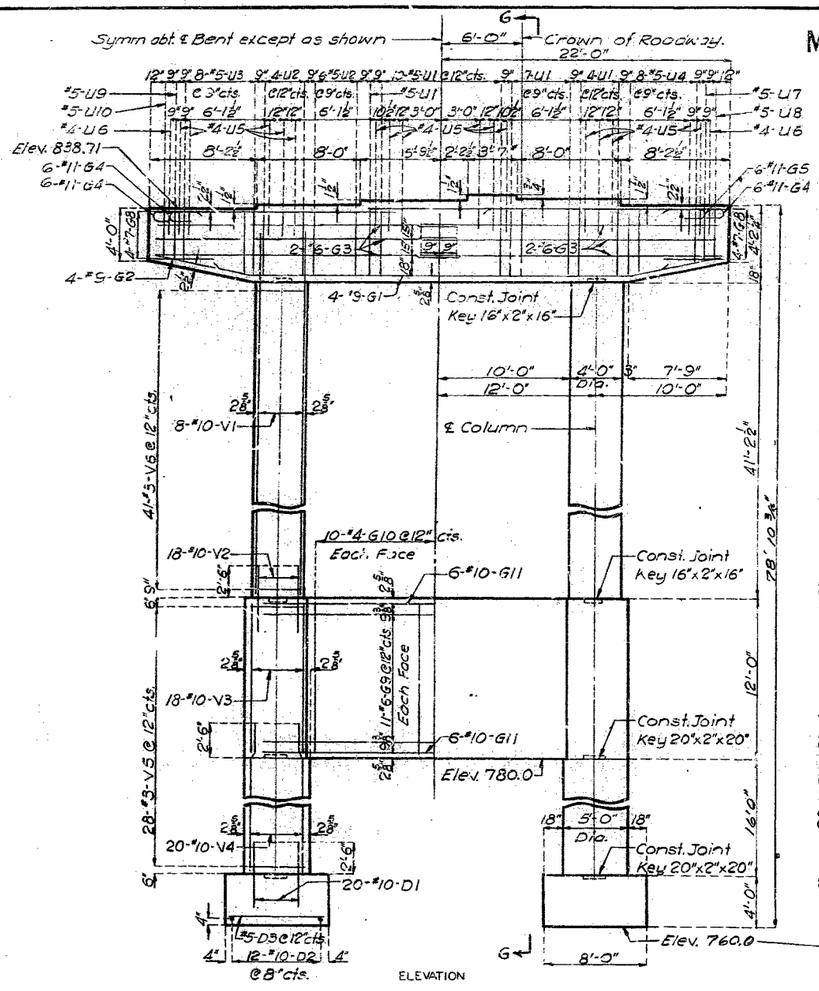

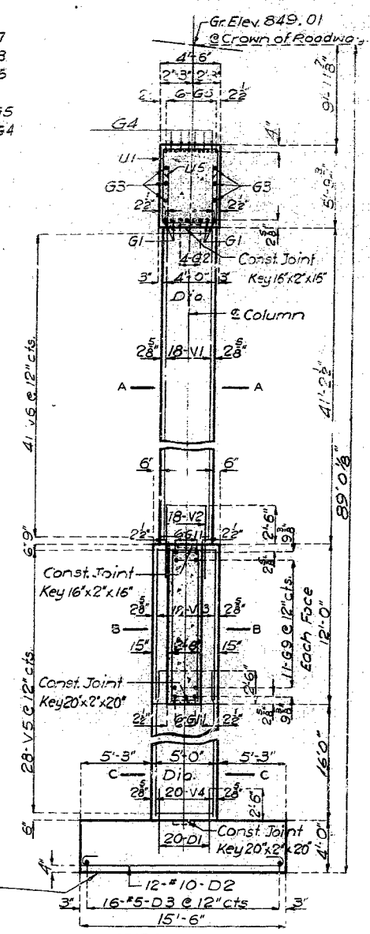

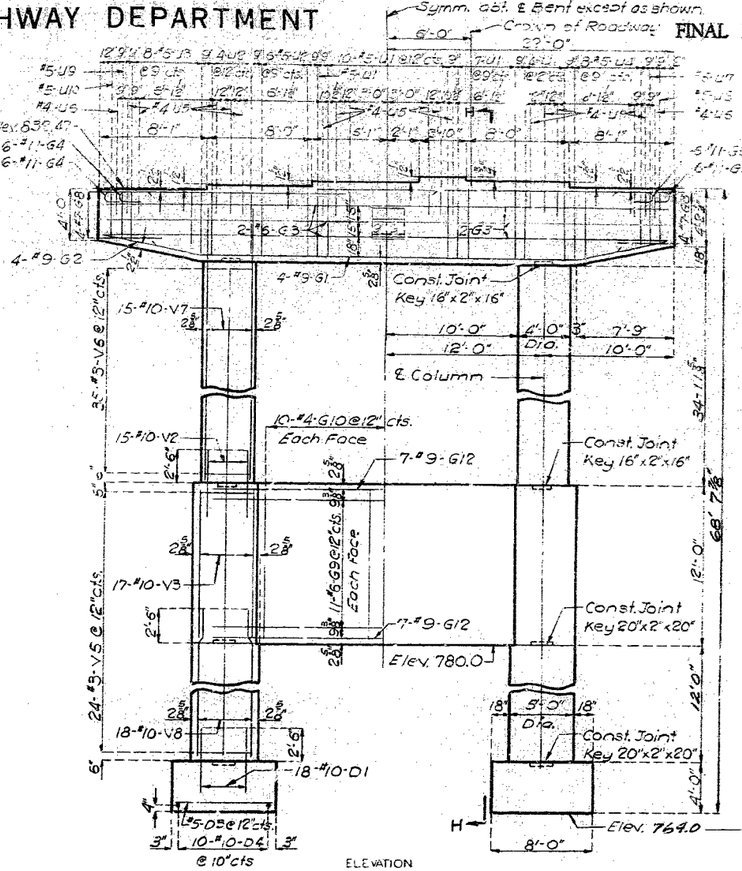

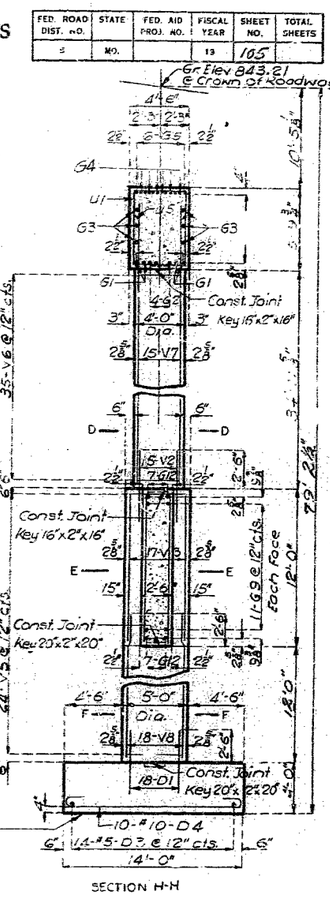

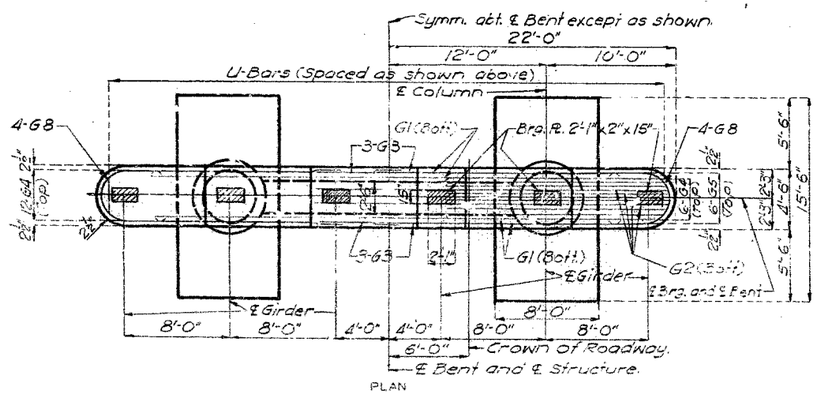

DETAILS OF INT. BENT NO. 3
RIGHT LANE

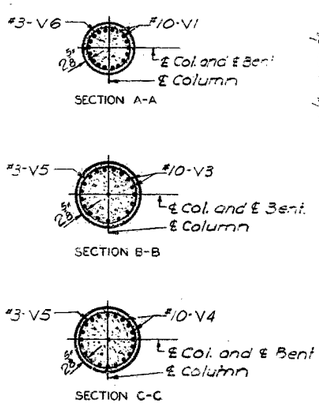

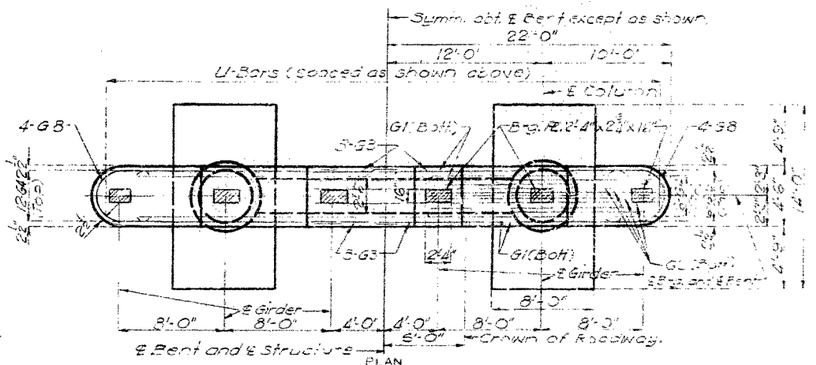

DETAILS OF INT. BENT NO. 4
RIGHT LANE

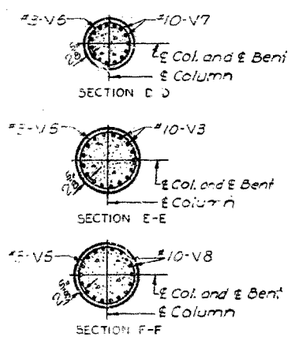

FINISHED

BRIDGE OVER BLUE RIVER ROAD AND BLUE RIVER

STATE ROAD: INTERSTATE ROUTE 435

ABOUT 5.0 MILES NORTH OF MARTIN CITY

PROJECT NO. I-IG-435-1(53)URTE [illegible] **STA.** 914+53.42 (LT. LANE) 914+63.08 (RT. LANE)

JACKSON FINISHED **COUNTY** FINISHED

A-610

DETAILED DEC. 1965 BY WOODS
CHECKED MARCH 1966 BY MOBERLY

Note: This drawing is not to scale. Follow dimensions.

Sheet No. 8A of 5.

179

MISSOURI HIGHWAY AND TRANSPORTATION COMMISSION

FED. ROAD DIST. NO.	STATE	FED. AID PROJ. NO.	FISCAL YEAR	SHEET NO.	TOTAL SHEETS
5	MO.		13	10	
SEC. 33		TWP. 48N	RGE. 33W		

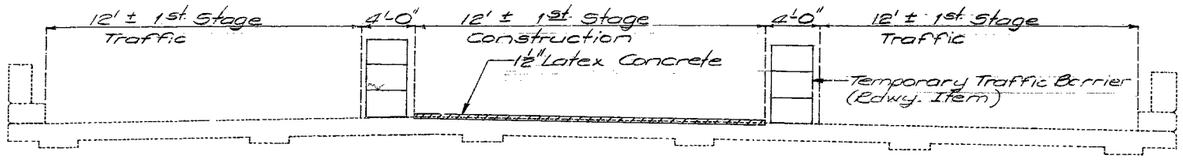

STAGE 1 CONSTRUCTION

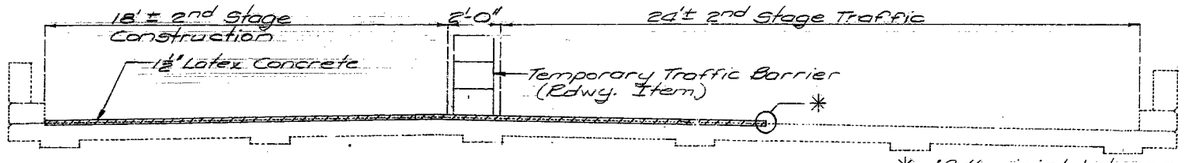

STAGE 2 CONSTRUCTION

* If the joint between latex overlay of stages 2 and 3 is damaged a new joint shall be saw cut the full length of the structure.

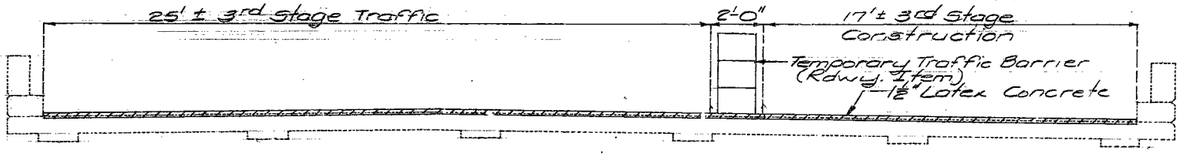

STAGE 3 CONSTRUCTION

Note: Paint: System B by contractor in accordance with Std Spec 712.13 (Color of the final field coat for System B shall be aluminum). Areas to be encased in end bent concrete shall be painted one coat of system C primer and scratched or damaged surfaces are to be touched up before concrete is poured.

ESTIMATED QUANTITIES		
ITEM		TOTAL
Special Work	Lump Sum	1
Latex Concrete Wearing Surface	Sq. Yd.	5045
Repairing Concrete Deck (Half Soling)	Sq. Ft.	6775
Full Depth Repair	Sq. Ft.	492
Painting (System B) Aluminum	Lump Sum	1

Note: Outline of old work is indicated by light dashed lines. Heavy lines indicate new work.

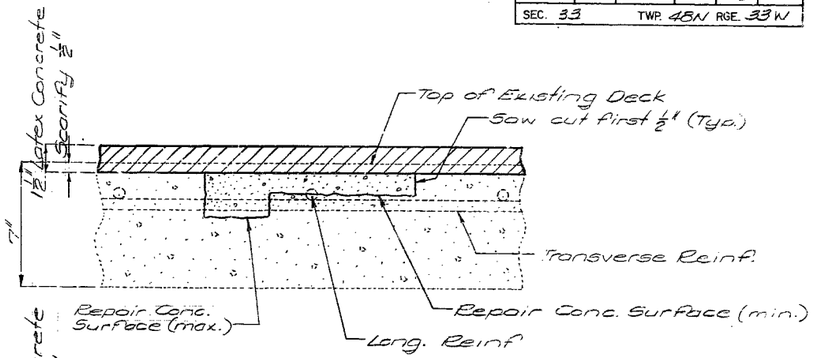

HALF SOLED AREA

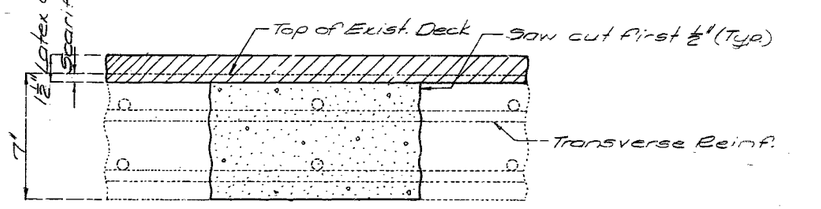

FULL DEPTH REPAIR

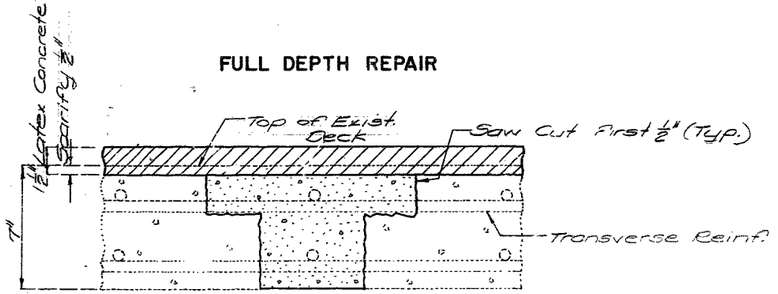

FULL DEPTH REPAIR IN HALF SOLED AREA

113

REPAIRS TO
BRIDGE OVER BLUE RIVER RD. & BLUE RIVER

STATE ROAD INTERSTATE 435

IN KANSAS CITY

PROJECT NO. IR-435-1(199)

JOB NO. 4-1435-442

JACKSON **COUNTY**

STA. 914+53.42 ± (LT. LANE)
STA. 914+63.08 ± (RT. LANE)

RTE. I-435

DATE 1/20/84

STD.
STD.
A-610R

DESIGNED SEPT 1983
DETAILED SEPT 1983
CHECKED SEPT 1983

Note: This drawing is not to scale. Follow dimensions.

FED. ROAD DIST. NO.	STATE	FED. AID PROJ. NO.	FISCAL YEAR	SHEET NO.	TOTAL SHEETS
5	MO.		19	11	

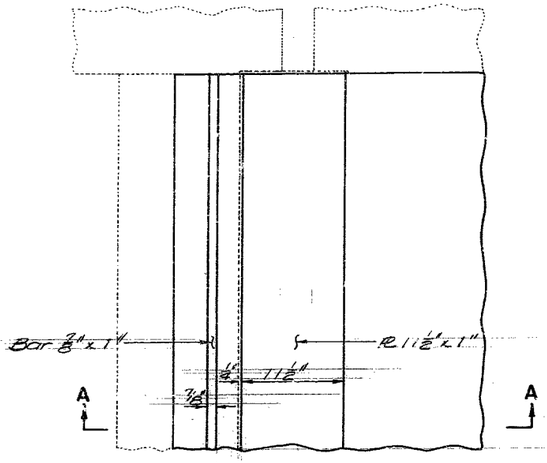

PART PLAN

✳ No painting required

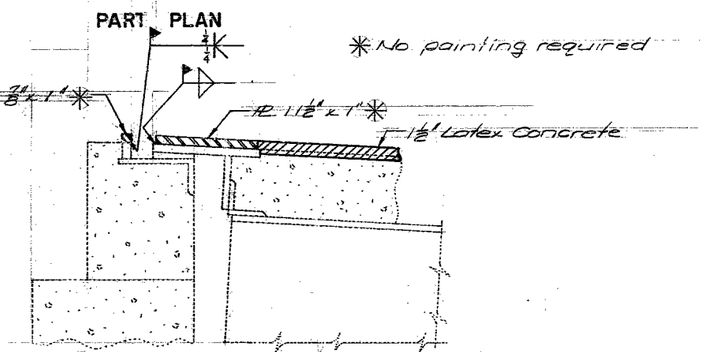

SECTION A-A

Note: Splices for ⅞" x 1" bar and 1 1/2" x 1" plate will be required for stage construction.

DETAILS OF EXP. DEVICE AT BENT NO. 1

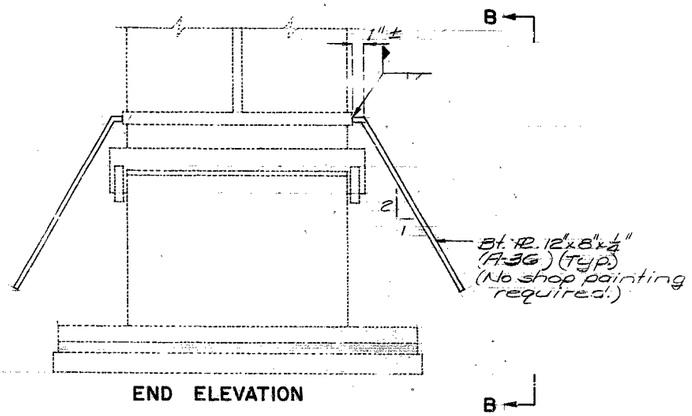

END ELEVATION

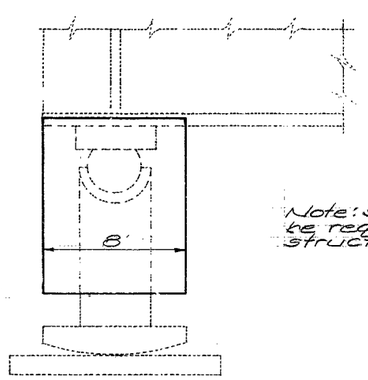

VIEW B-B

Note: Shop drawings will not be required for fabricated structural steel.

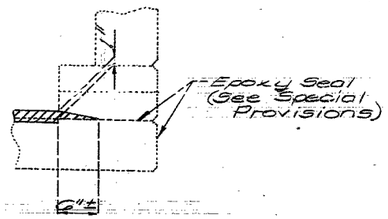

TYP. SECTION AT CURBS SHOWING OUTLETS

DETAILS OF BEARING MODIFICATION AT END BENT NO. 1

Note: Bars bonded in old concrete not removed shall be cleanly stripped and embedded into new concrete where possible. If length is available old bars shall extend into new concrete at least 40 diameters for smooth bars and 30 diameters for deformed bars.

Note: Concrete @ End Bent #5 shall be Class B, f'c = 3000 psi. Reinforcement @ End Bent #5 shall be Grade 60, fy = 60,000 psi.

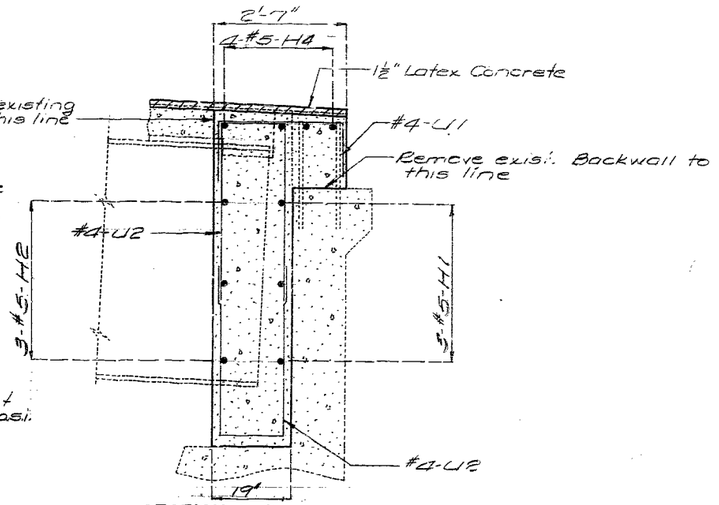

SECTION C-C

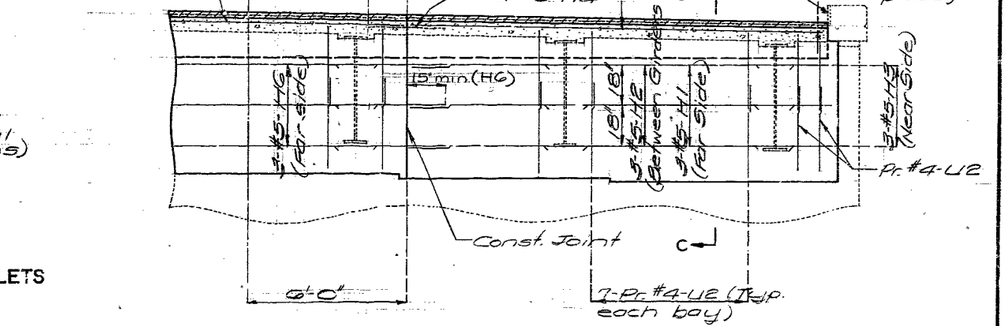

PART SECTION NEAR END BENT NO. 5
RIGHT OR LEFT LANE

Note: The quantities shown in the Bill of Reinforcement are for one bent only.

BILL OF REINFORCEMENT				
NO.	SIZE	MARK	SHAPE	LENGTH
6	5	H1	20	16'-3"
15	5	H2	20	7'-0"
6	5	H3	20	2'-0"
59	4	U1	105	3'-8"
78	4	U2	105	7'-10"
8	5	H4	20	15'-9"
4	5	H5	20	11'-9"
3	5	H6	20	14'-6"

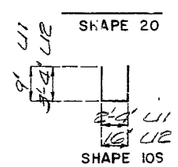

S = Stirrup Bend

Note: Bars shall be bent in accordance with the CRSI Manual of Standard Practice.

DETAILS OF END BENT NO. 5

114

DETAILED SEPT 1985
CHECKED SEPT 1985

Note: This drawing is not to scale. Follow dimensions.

Sheet No. 2 of 2.

JACKSON COUNTY

A-610R

MISSOURI HIGHWAY AND TRANSPORTATION COMMISSION

FED. ROAD DIST. NO.	STATE	FED. AID PROJ. NO.	FISCAL YEAR	SHEET NO.	TOTAL SHEETS
5	MO.		19	10	
SEC. 33		TWP. 48N	RGE. 33W		

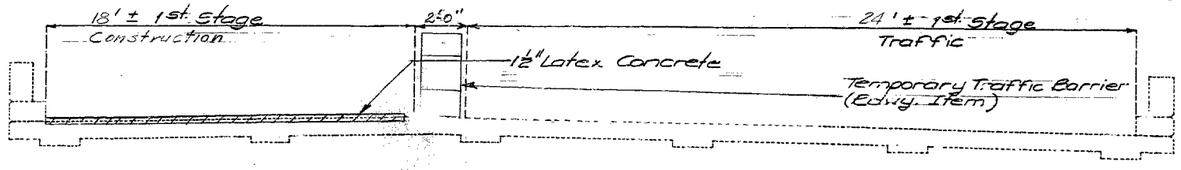

STAGE 1 CONSTRUCTION

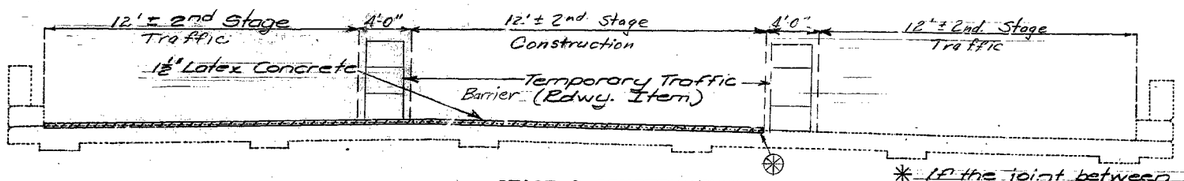

STAGE 2 CONSTRUCTION

* If the joint between latex overlay of stages 2 and 3 was damaged a new joint was saw cut the full length of the structure.

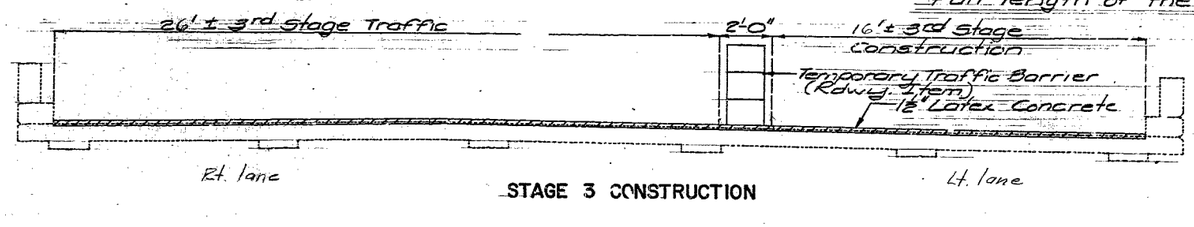

STAGE 3 CONSTRUCTION

Note: Paint: System B by contractor in accordance with Std. Spec. 711.13 (Color of the final field coat for System B was aluminum). Areas encased in end bent concrete were painted one coat of system C primer and scratched or damaged surfaces were touched up before concrete poured.

QUANTITIES		
ITEM		TOTAL
Special Work	Lump Sum	1
Latex Concrete Wearing Surface	Sq. Yd.	5045
Repairing Concrete Deck (Half-Soling)	Sq. Ft.	5772
Full Depth Repair	Sq. Ft.	87
Painting (System B) Aluminum	Lump Sum	1

Note: Outline of old work is indicated by light dashed lines. Heavy lines indicate new work.

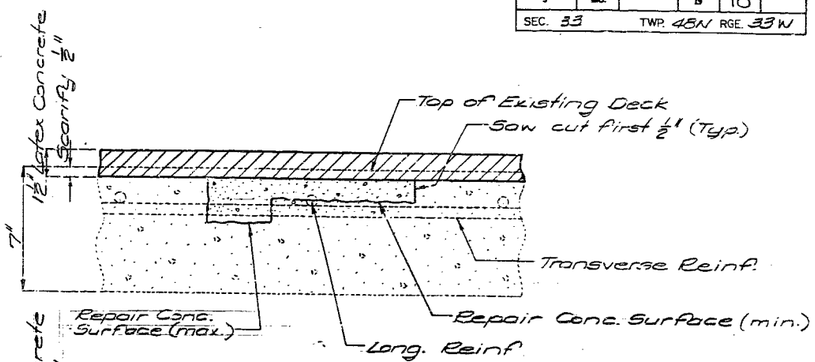

HALF SOLED AREA

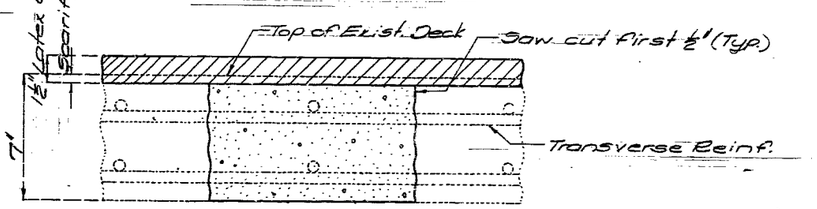

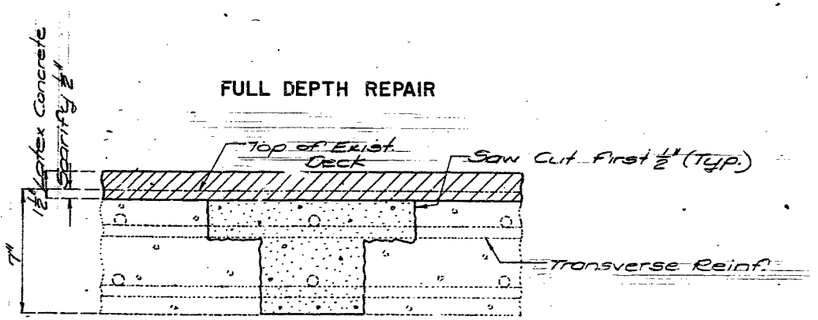

FULL DEPTH REPAIR

FULL DEPTH REPAIR IN HALF SOLED AREA

REPAIRS TO
BRIDGE OVER BLUE RIVER RD. & BLUE RIVER

STATE ROAD INTERSTATE 435

IN KANSAS CITY

PROJECT NO. IR-435-1(199) — STA. 914+53.42 ± (LT. LANE) STA. 914+63.08 ± (RT. LANE)

JOB NO. 4-1435-442 — **RTE.** I-435 — STD.

JACKSON — COUNTY — STD. A-SIOR

DATE 1/20/84

DESIGNED SEPT 19 83
DETAILED SEPT 19 83
CHECKED SEPT 19 83

Note: This drawing is not to scale. Follow dimensions.

Sheet No. 1 of 2.

STATE	PROJ. NO.	SHEET NO.
MO.		

① = 4" FILL FACE
① = 6" FRONT FACE
② = 6-#6-D1 @ 8" CTS. FILL FACE
② = 4-#6-D1 @ 12" CTS. FRONT FACE
③ = 3"
④ = 6-#6-D1 @ 6" CTS. FILL FACE
④ = 4-#6-D1 @ 10" CTS. FRONT FACE

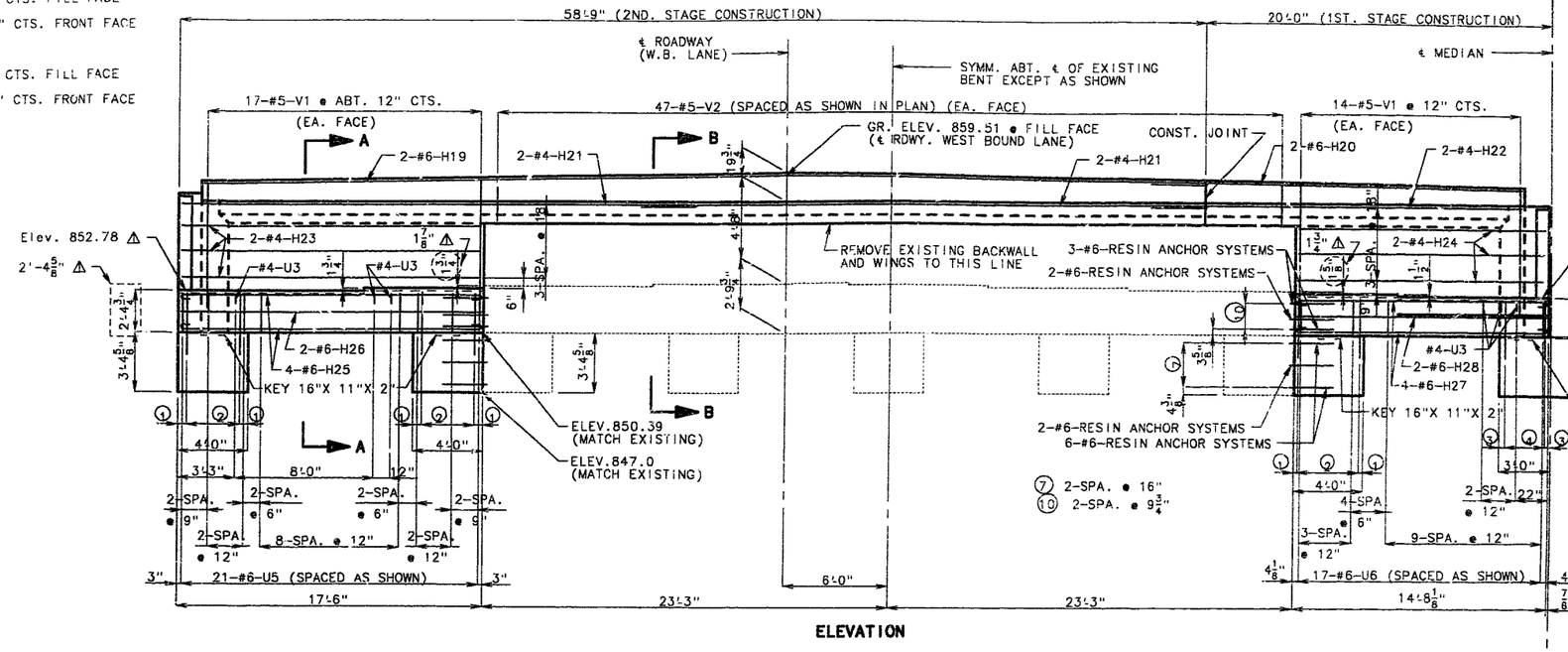

ELEVATION

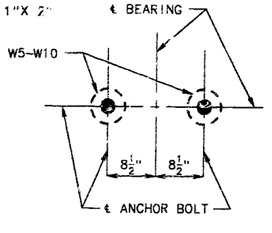

PLAN OF ANCHOR BOLTS

NOTE: TOP OF BACKWALL AND EXPANSION DEVICE FOR END BENT NO. 1 SHALL CONFORM TO THE CROWN OF ROADWAY SLAB. BACKWALL ABOVE UPPER CONSTRUCTION JOINT SHALL NOT BE POURED UNTIL THE SUPERSTRUCTURE SLAB HAS BEEN POURED IN THE ADJACENT SPAN.
FIELD BENDING SHALL BE REQUIRD FOR #6-F-BARS WHEN NECESSARY TO CONFORM TO SLOPE OF WING.
FOR DETAIL OF RESIN ANCHOR SYSTEMS SEE SHEET NO. 22.
FOR DETAILS OF ANCHOR BOLT WELLS SEE SHEET NO. 32.
FOR DETAILS AND REINFORCEMENT OF SAFETY BARRIER CURB SEE SHEETS NO. 41, 42 & 43.
FOR SUBSTRUCTURE QUAINTY TABLE, SECTIONS A-A, B-B AND ELEVATION OF WINGS SEE SHEET NO. 8.

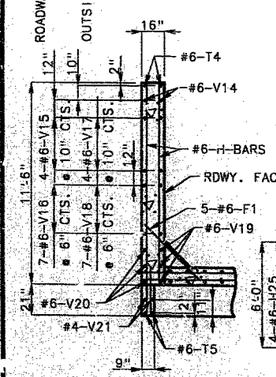

SECTION THRU WING

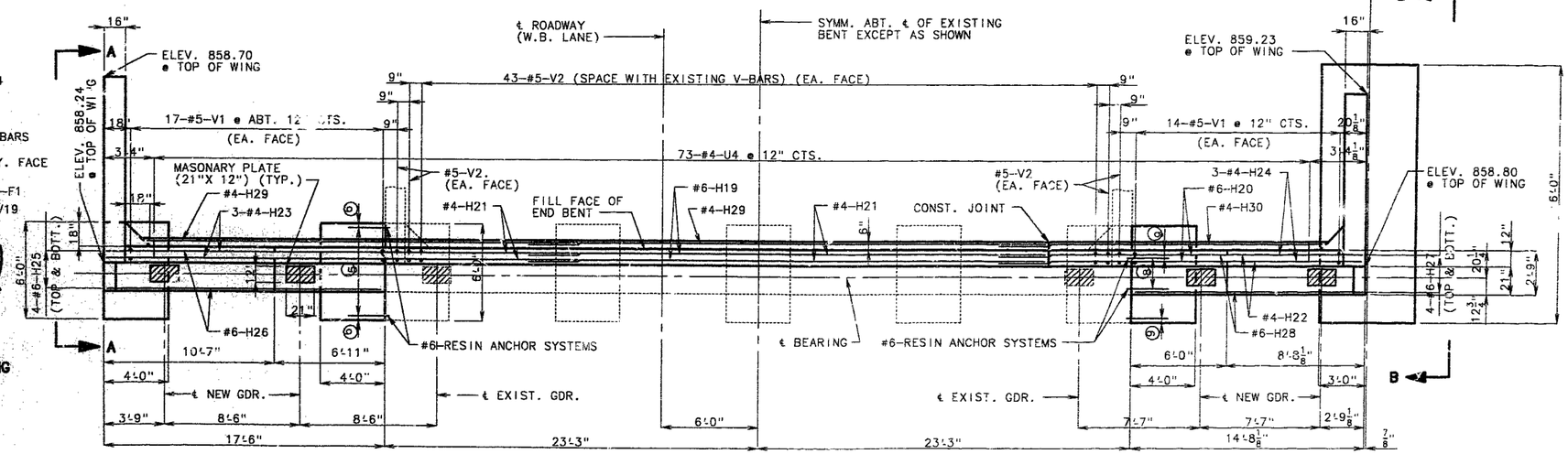

PLAN
DETAILS OF END BENT NO. 1
(WEST BOUND LANE)

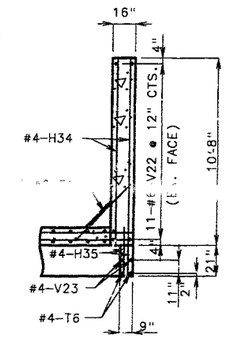

SECTION THRU WING

⑤ = 6-#6-RESIN ANCHOR SYSTEMS (TOP & BOTT.) @ 12½" CTS.
⑥ = 4¾"

⑧ = 3-#6-RESIN ANCHOR SYSTEMS (TOP & BOTT.) @ 12" CTS.
⑨ = 4½"

⚠ Revised 5/19/94

REVISED:

DETAILED APRIL 1993
CHECKED JUNE 1993

NOTE: THIS DRAWING IS NOT TO SCALE. FOLLOW DIMENSIONS.

SHEET NO. 7 OF 51. JACKSON COUNTY A-610R1

STATE	PROJ. NO.	SHEET NO.
MO.		305

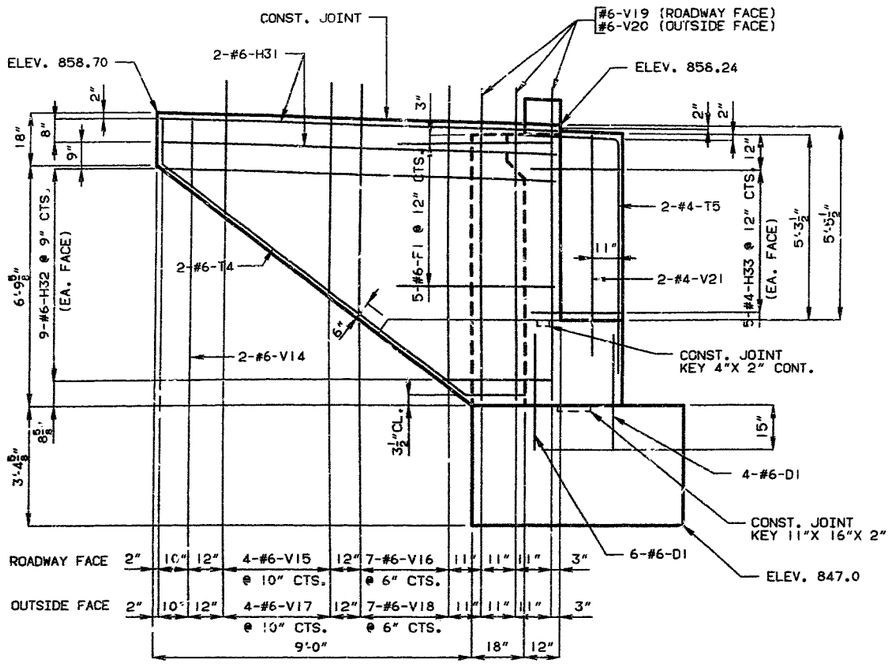

ELEVATION A-A

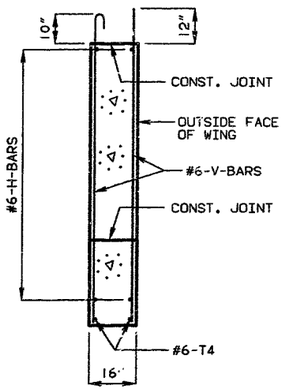

SECTION THRU WING A-A

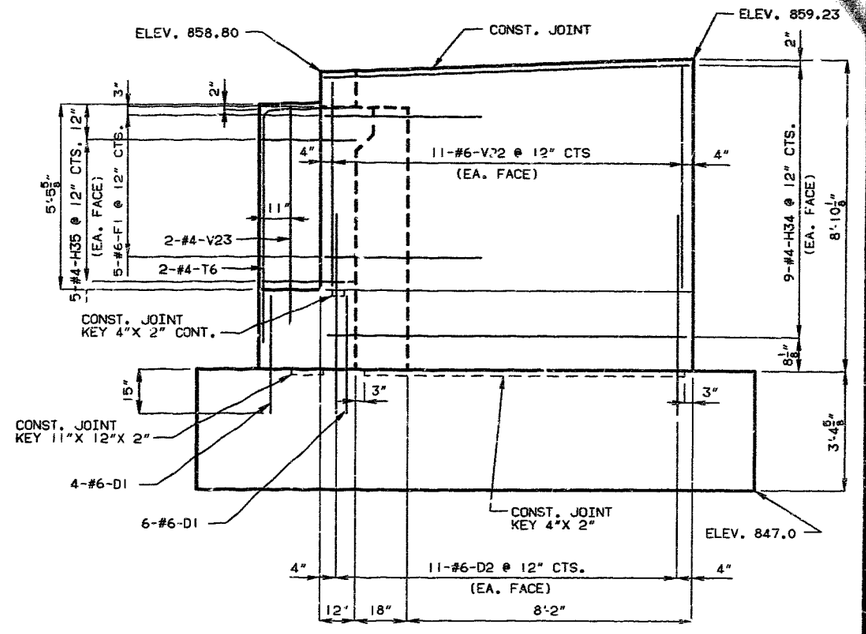

ELEVATION B-B

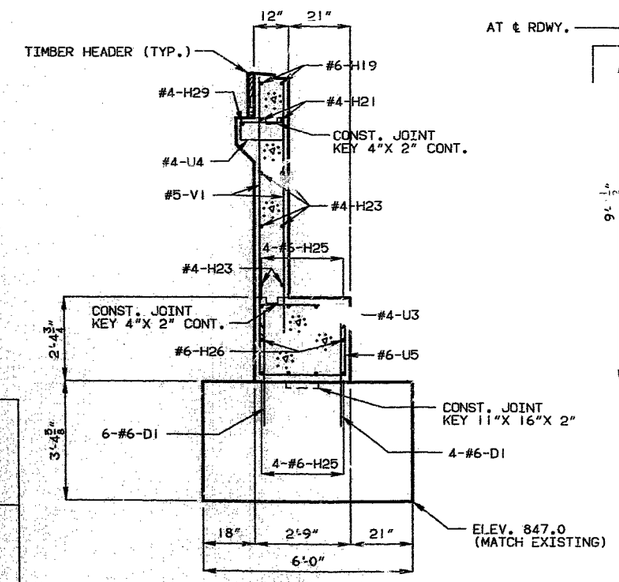

SECTION A-A

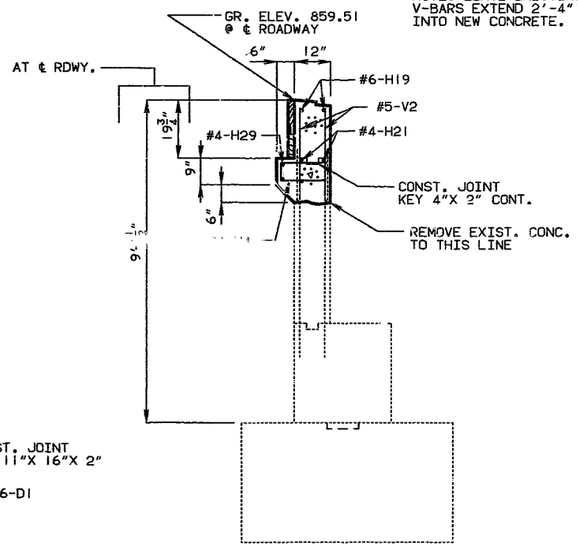

SECTION B-B

NOTE: LEAVE EXISTING V-BARS EXTEND 2'-4" INTO NEW CONCRETE.

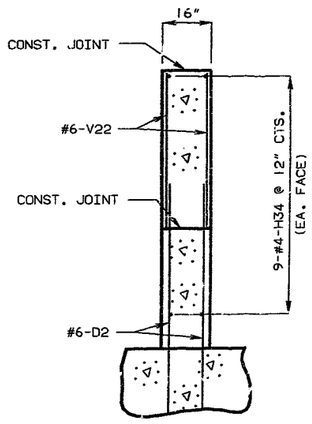

SECTION THRU WING B-B

SUBSTRUCTURE QUANTITY TABLE FOR BENT NO. 1		
ITEM		QUANTITY
CLASS 1 EXCAVATION	CU. YDS.	55
CLASS B CONCRETE (SUBSTR.)	CU. YDS.	38.6
REINFORCING STEEL (BRIDGES)	LB.	7410
REINFORCING STEEL (EPOXY COATED)	LB.	540

NOTE: THESE QUANTITIES ARE INCLUDED IN THE ESTIMATED QUANTITIES TABLE ON SHEET NO. 2.

NOTE: THE AREA EXPOSED BY THE REMOVAL OF CONCRETE AND NOT COVERED WITH NEW CONCRETE SHALL BE COATED WITH AN APPROVED BITUMINOUS PAINT. FOR DETAILS OF TIMBER HEADER SEE SHEET NO. 43.

DETAILS OF END BENT NO. 1
(WEST BOUND LANE)

REVISED!

DETAILED MAY 1993
CHECKED JUNE 1993

NOTE: THIS DRAWING IS NOT TO SCALE. FOLLOW DIMENSIONS.

JACKSON COUNTY A-6101

STATE	PROJ. NO.	SHEET NO.
MD.		306

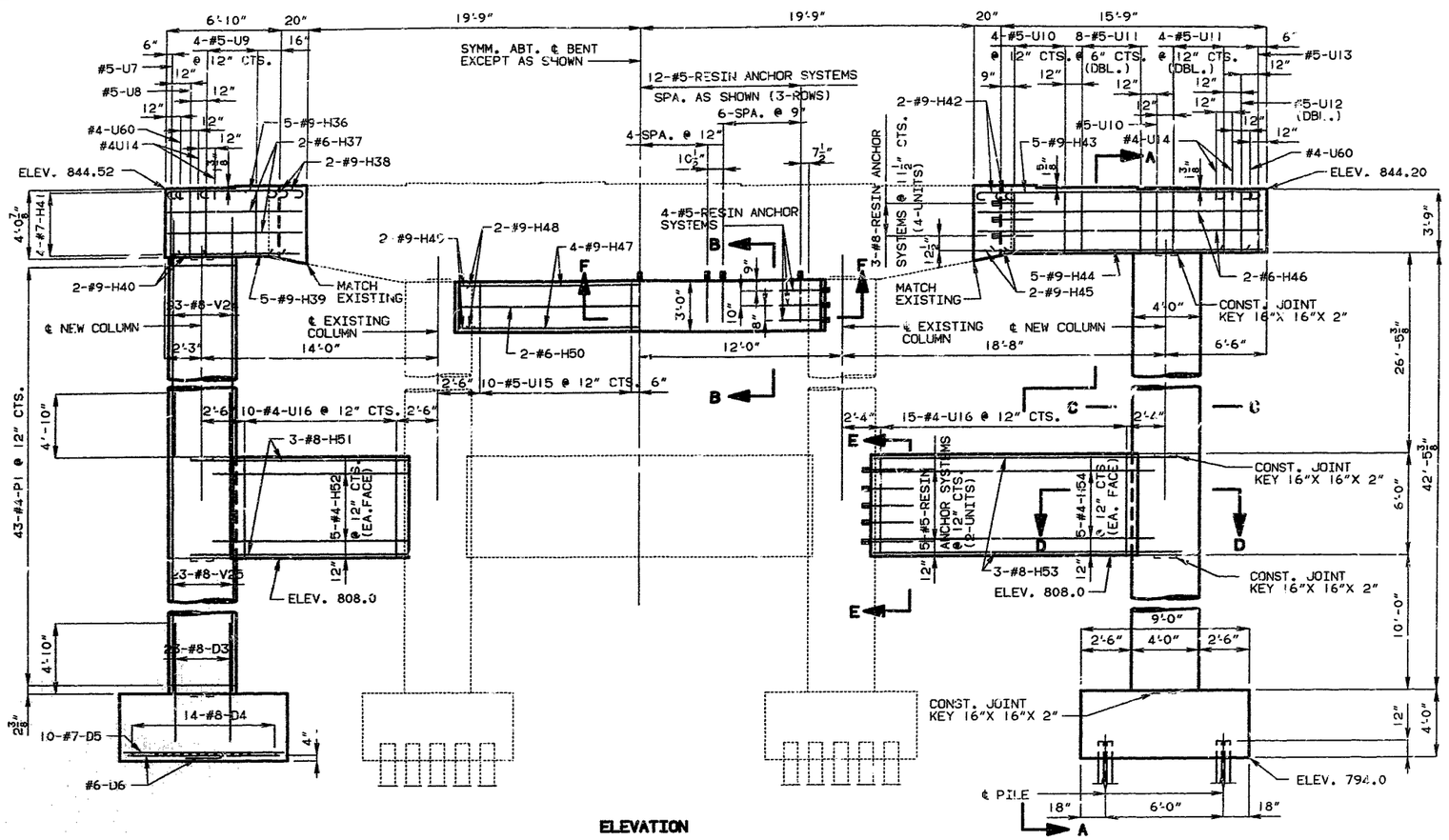

ELEVATION

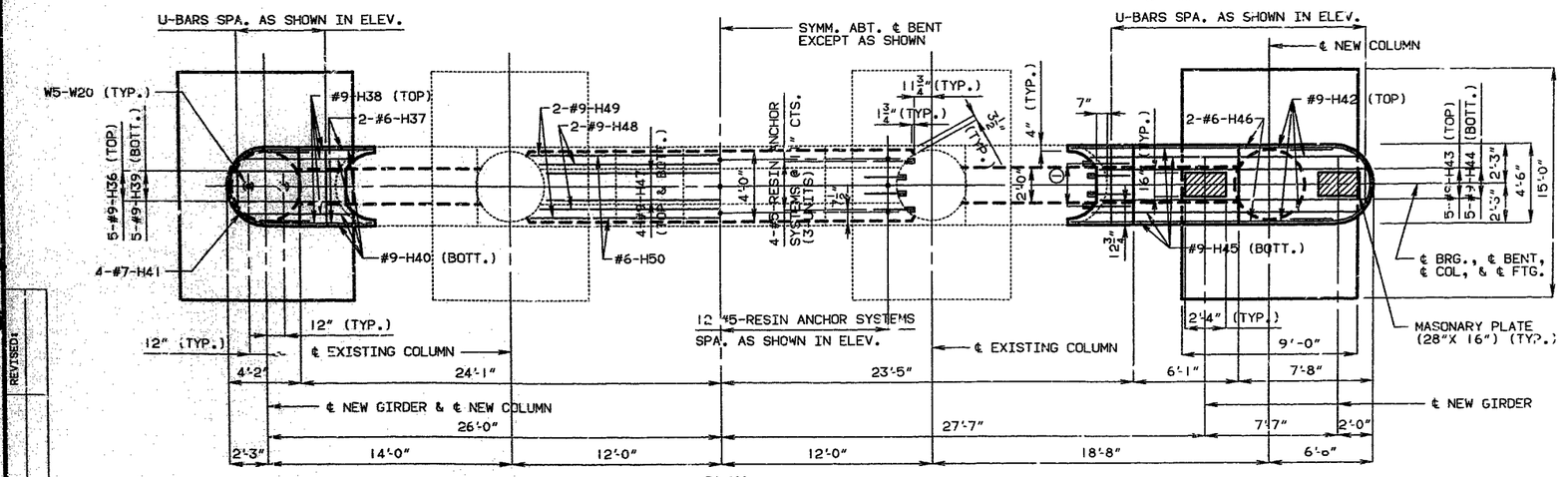

PLAN

DETAILS OF INTERMEDIATE BENT NO. 2 (E.B.L.)

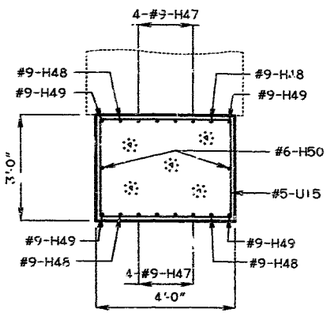

SECTION B-B

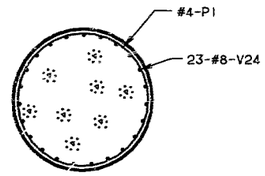

SECTION C-C

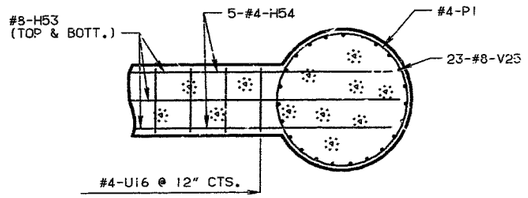

SECTION D-D

① 1-#8-RESIN ANCHOR SYSTEMS @ 9½" CTS. (3-UNITS)

NOTE: FOR DETAILS OF RESIN ANCHOR SYSTEMS SEE SHEET NO. 22.
FOR SECTION A-A, E-E, F-F, PLAN OF FOOTING AND SUBSTRUCTURE QUANITY TABLE FOR BENT NO. 2 SEE SHEET. NO. 10.
FOR DETAILS OF ANCHOR BOLT WELLS SEE SHEET NO. 32.
FOR DETAILS OF STEEL PILE SPLICE SEE SHEET NO. 22.

REVISED

DETAILED JUNE 1993
CHECKED JULY 1993

NOTE: THIS DRAWING IS NOT TO SCALE. FOLLOW DIMENSIONS.

JACKSON COUNTY A-610(1)

STATE	PROJ. NO.	SHEET
MO.		30

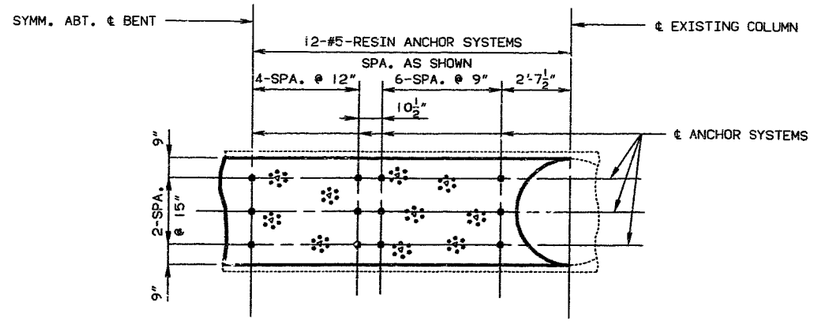

SECTION F-F

(NOTE: SECTION SHOWING RESIN ANCHOR SYSTEMS)

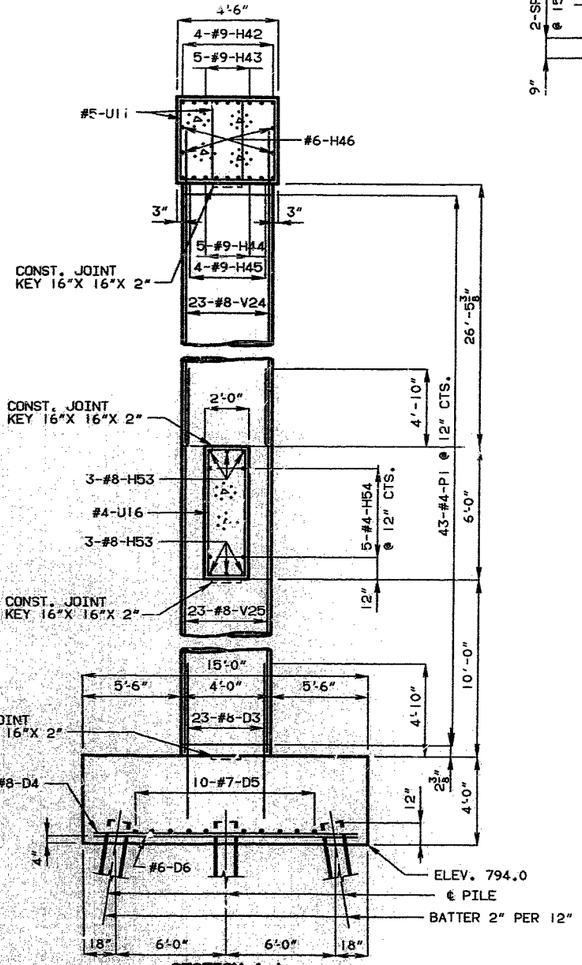

SECTION A-A

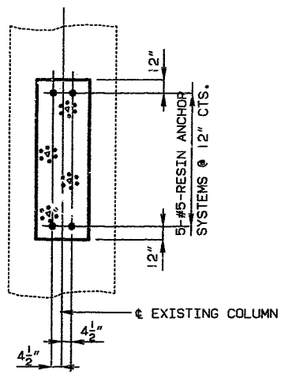

SECTION E-E

(NOTE: SECTION SHOWING RESIN ANCHOR SYSTEMS)

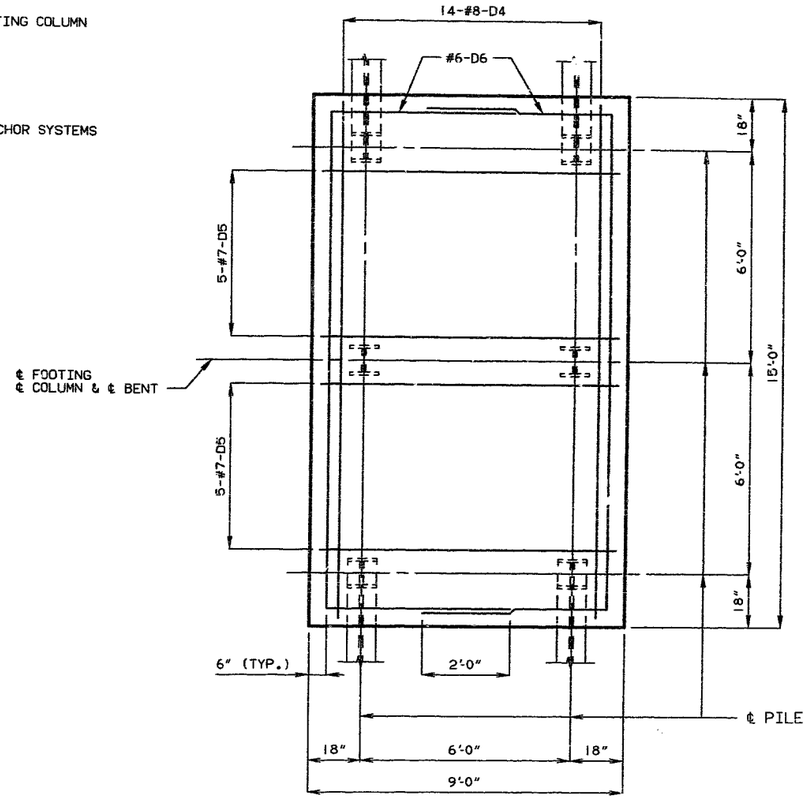

PLAN OF FOOTING

NOTE: FOR LOCATION OF SECTIONS A-A, E-E AND F-F SEE SHEET NO. 9.

SUBSTRUCTURE QUANTITY TABLE FOR BENT NO. 2

ITEM		QUANTITY
CLASS I EXCAVATION	CU. YDS.	115
STRUCTURAL STEEL PILE (12")	LIN. FT.	234
PRE-BORE	LIN. FT.	156
CLASS B CONCRETE (SUBSTR.)	CU. YDS.	114.5
REINFORCING STEEL (BRIDGES)	LBS.	14160

NOTE: WORK THIS TABLE WITH ESTIMATED QUANTITIES AS SHOWN ON SHEET NO. 2.

REVISED:

DETAILS OF INTERMEDIATE BENT NO. 2 (E.B.L.)

DETAILED JUNE 1993
CHECKED JULY 1993

NOTE: THIS DRAWING IS NOT TO SCALE. FOLLOW DIMENSIONS.

JACKSON COUNTY A-610R1

STATE	PROJ. NO.	SHEET NO.
MO.		308

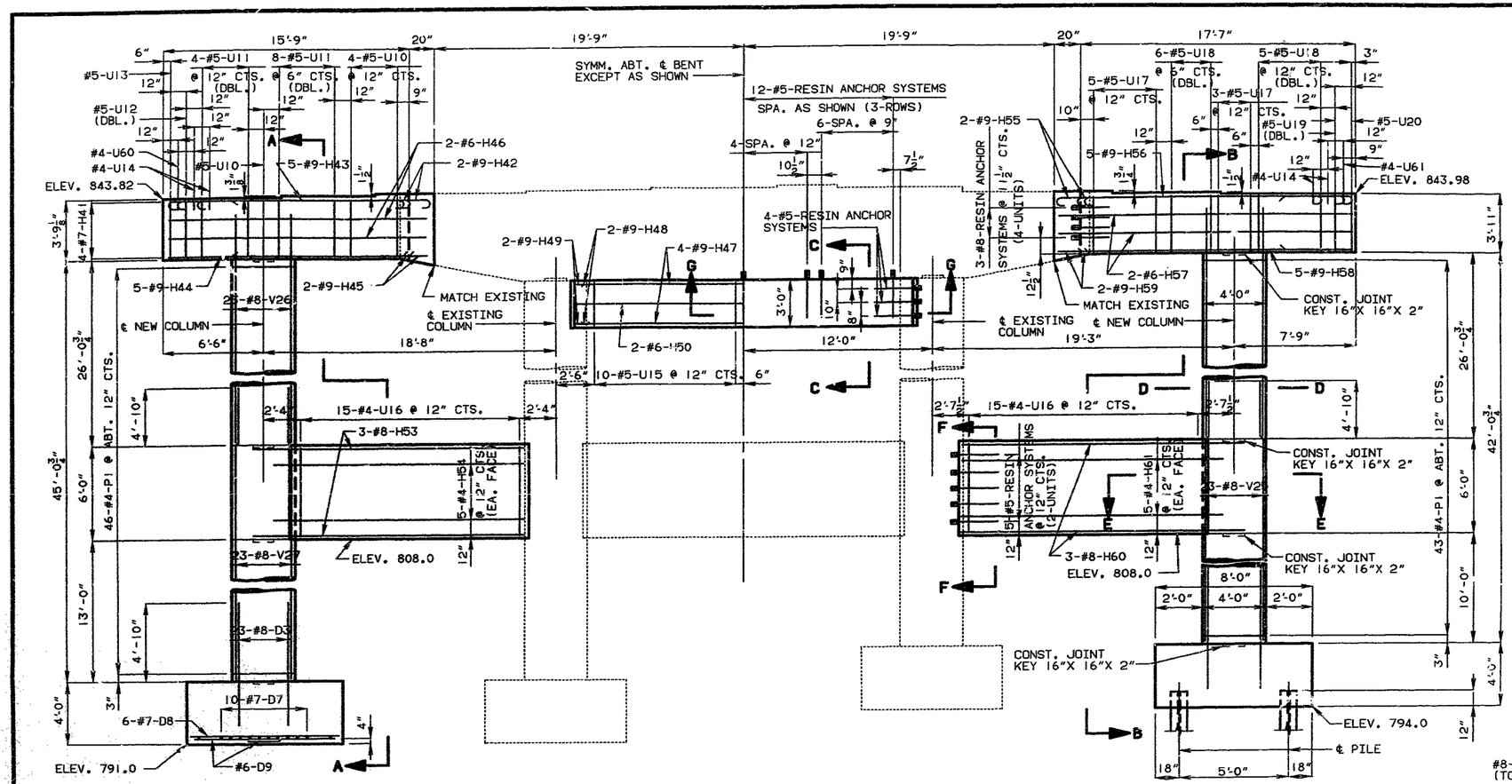

SECTION C-C

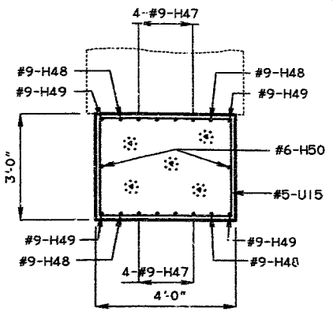

SECTION D-D

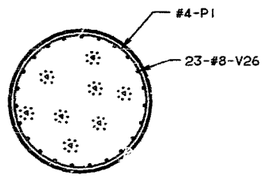

SECTION E-E

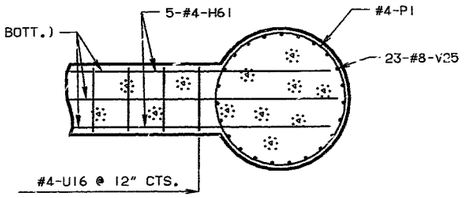

ELEVATION

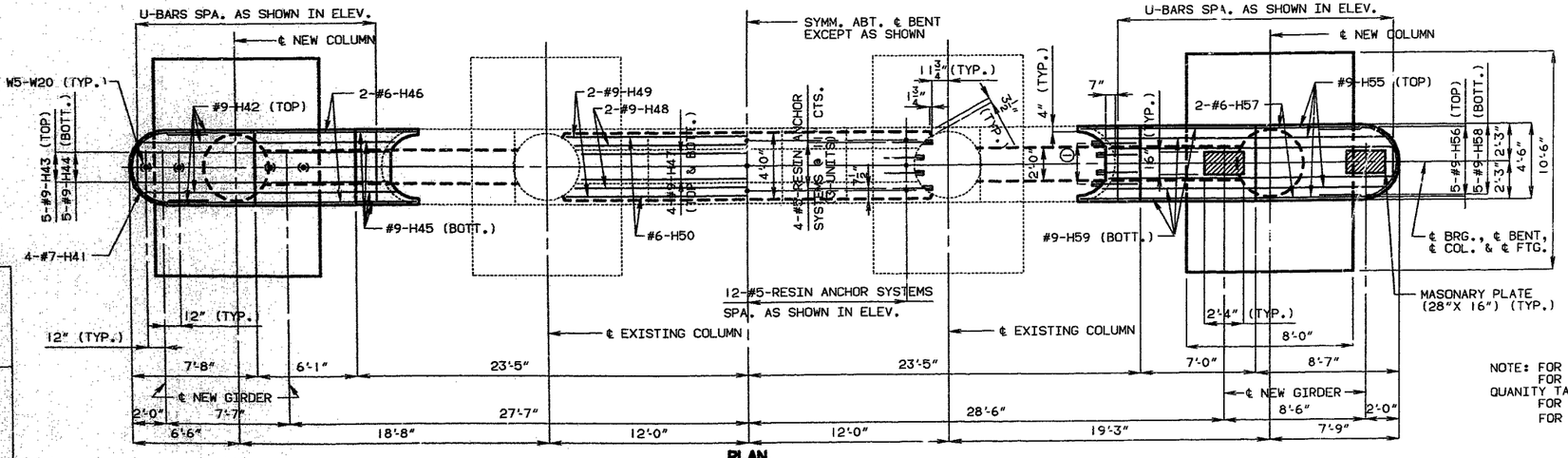

PLAN

① 4-#8-RESIN ANCHOR SYSTEMS @ 9½" CTS. (3-UNITS)

NOTE: FOR DETAILS OF RESIN ANCHOR SYSTEMS SEE SHEET NO. 22.
FOR SECTION A-A, B-B, F-F, G-G, PLAN OF FOOTING AND SUBSTRUCTURE QUANITY TABLE FOR BENT NO. 2 SEE SHEET. NO. 12.
FOR DETAILS OF STEEL PILE SPLICE SEE SHEET NO. 22.
FOR DETAILS OF ANCHOR BOLT WELLS SEE SHEET NO. 32.

DETAILS OF INTERMEDIATE BENT NO. 2 (W.B.L.)

REVISED

DETAILED JUNE 1993
CHECKED AUG. 1993

NOTE: THIS DRAWING IS NOT TO SCALE. FOLLOW DIMENSIONS.

JACKSON COUNTY A-610R1

STATE	PROJ. NO.	SHEET NO.
MO.		309

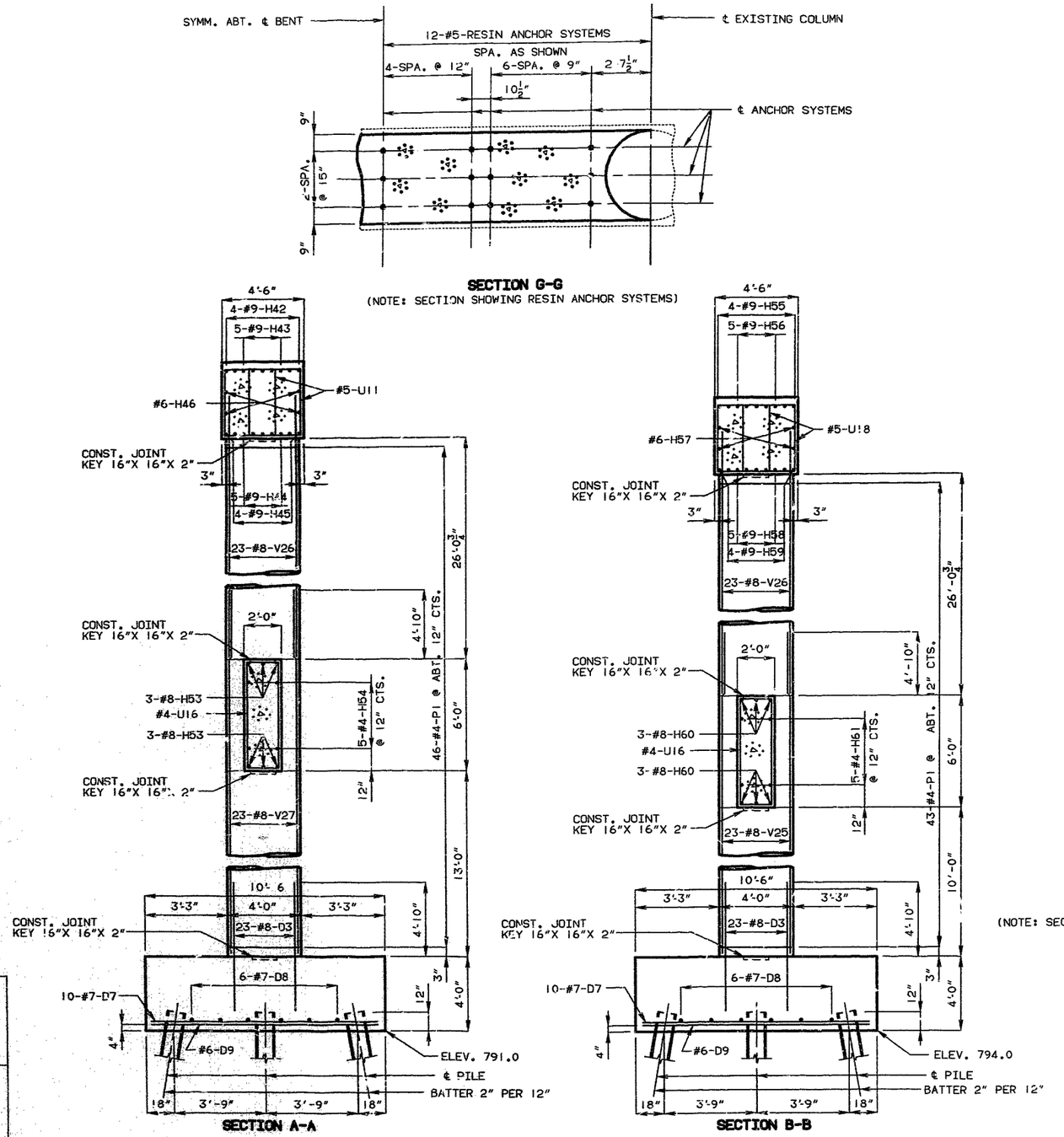

SECTION G-G
(NOTE: SECTION SHOWING RESIN ANCHOR SYSTEMS)

SECTION A-A

SECTION B-B

SECTION F-F
(NOTE: SECTION SHOWING RESIN ANCHOR SYSTEMS)

PLAN OF FOOTING

NOTE: FOR LOCATION OF SECTIONS A-A, B-B, F-F AND G-G SEE SHEET NO. 11.

SUBSTRUCTURE QUANTITY TABLE FOR BENT NO. 2		
ITEM		QUANTITY
CLASS I EXCAVATION	CU. YDS.	130
STRUCTURAL STEEL PILE (12")	LIN. FT.	216
PRE-BORE	LIN. FT.	138
CLASS B CONCRETE (SUBSTR.)	CU. YDS.	109.8
REINFORCING STEEL (BRIDGES)	LBS.	14720

NOTE: WORK THIS TABLE WITH ESTIMATED QUANTITIES AS SHOWN ON SHEET NO. 2.

DETAILS OF INTERMEDIATE BENT NO. 2 (W.B.L.)

REVISED:

DETAILED JULY 1993
CHECKED AUG. 1993

NOTE: THIS DRAWING IS NOT TO SCALE. FOLLOW DIMENSIONS.

JACKSON COUNTY A-610R1

334297

STATE NO.	PROJ. NO.	SHEET NO.

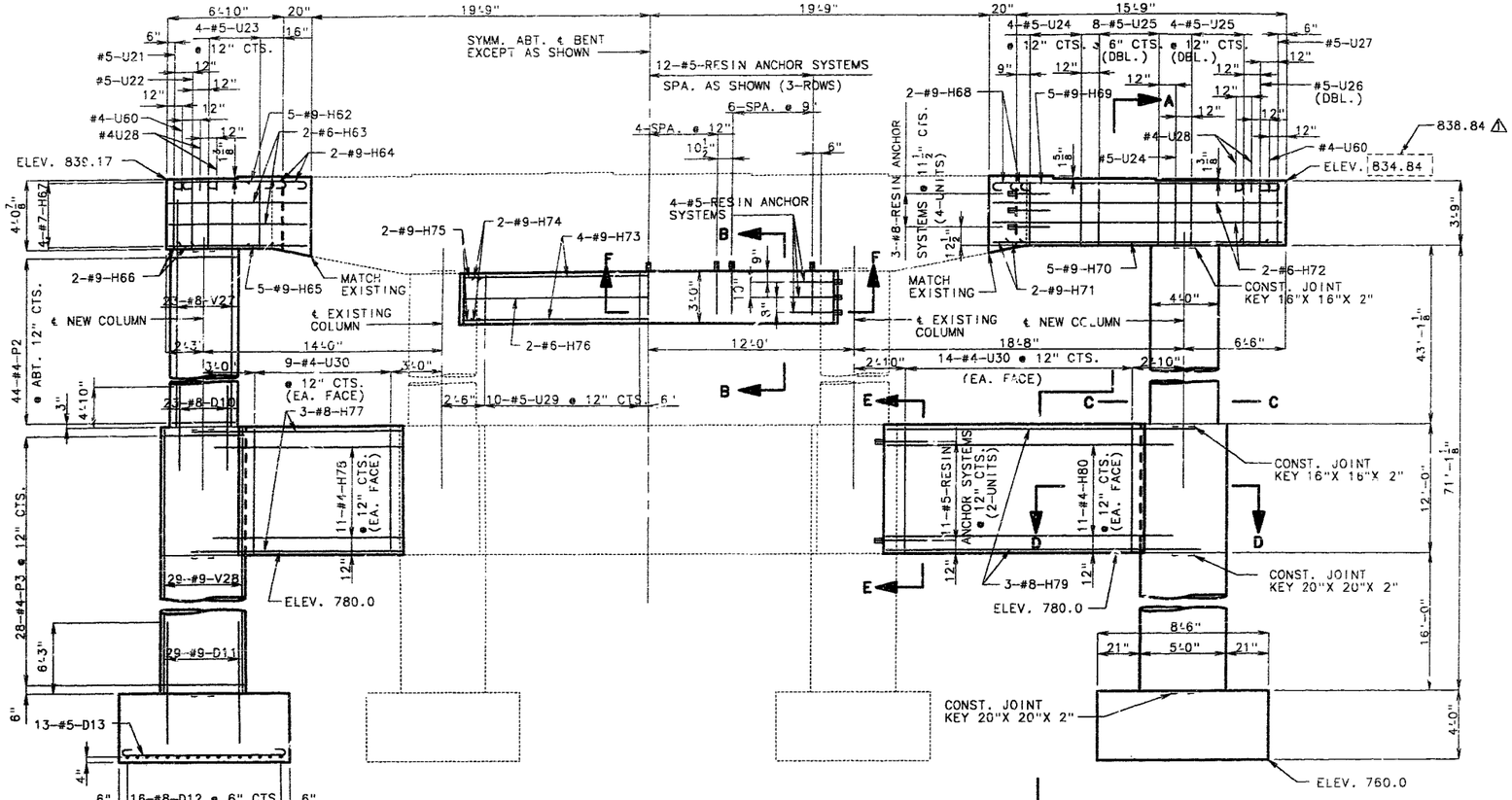

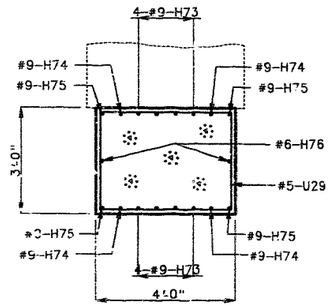

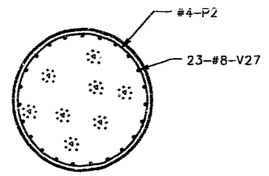

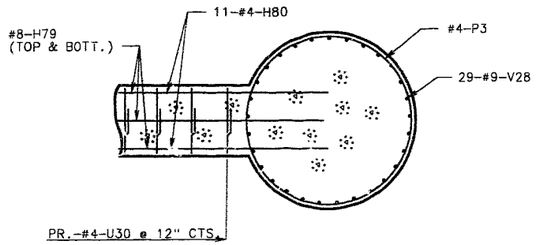

① 4-#8-RESIN ANCHOR SYSTEMS @ 9½" (3-UNITS)

NOTE: FOR DETAILS OF RESIN ANCHOR SYSTEMS SEE SHEET NO. 22.
FOR SECTION A-A, E-E, F-F AND SUBSTRUCTURE QUANITY TABLE FOR BENT NO. 3 SEE SHEET. NO. 14.
FOR DETAILS OF ANCHOR BOLT WELLS SEE SHEET NO. 32.

⚠ Revised 5/19/94

DETAILS OF INTERMEDIATE BENT NO. 3 (E.B.L.)

NOTE: THIS DRAWING IS NOT TO SCALE. FOLLOW DIMENSIONS.

DETAILED JUNE 1993
CHECKED JULY 1993

REVISED

SHEET NO. 13 OF 51.

JACKSON COUNTY

A-610R1

STATE	PROJ. NO.	SHEET NO.
MO.		311

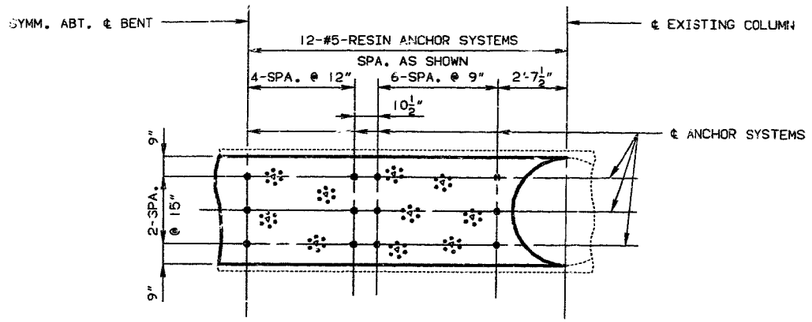

SECTION F-F

(NOTE: SECTION SHOWING RESIN ANCHOR SYSTEMS)

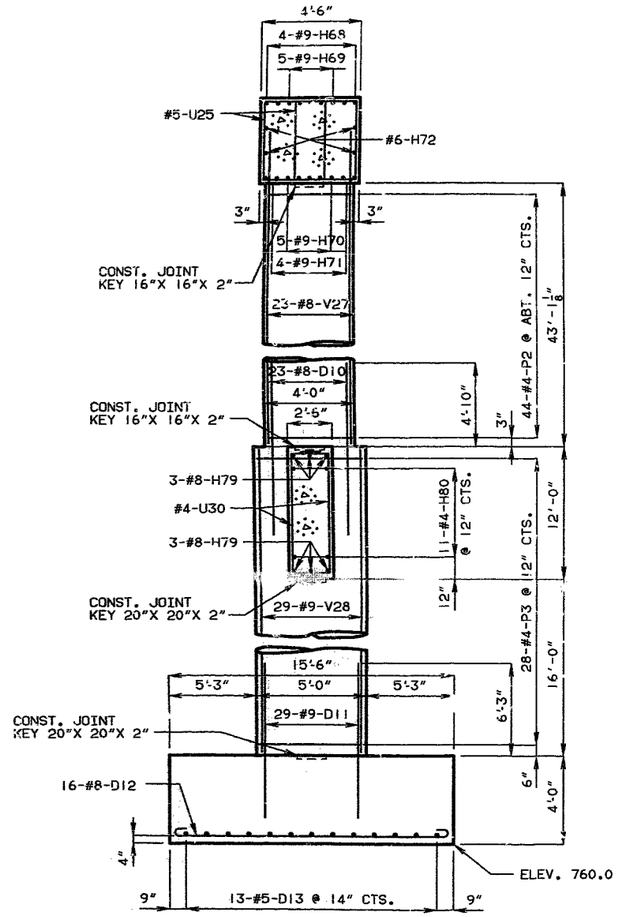

SECTION A-A

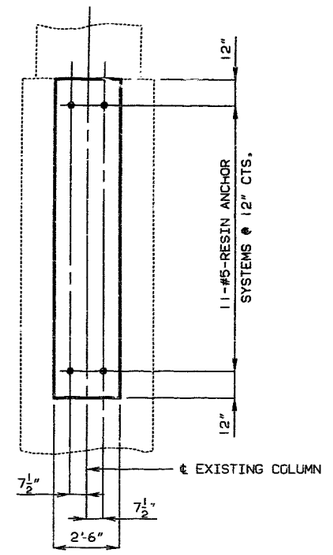

SECTION E-E

(NOTE: SECTION SHOWING RESIN ANCHOR SYSTEMS)

NOTE: FOR LOCATION OF SECTIONS A-A, E-E AND F-F SEE SHEET NO. 13.

SUBSTRUCTURE QUANTITY TABLE FOR BENT NO. 3		
ITEM		**QUANTITY**
CLASS 1 EXCAVATION	CU. YDS.	150
CLASS 2 EXCAVATION	C. YDS.	142
CLASS B CONCRETE (SUBSTR.)	CU. YDS.	169.5
REINFORCING STEEL (BRIDGES)	LBS.	22070

NOTE: WORK THIS TABLE WITH ESTIMATED QUANTITIES AS SHOWN ON SHEET NO. 2.

REVISED

DETAILED JUNE 1993
CHECKED JULY 1993

DETAILS OF INTERMEDIATE BENT NO. 3 (E.B.L.)

NOTE: THIS DRAWING IS NOT TO SCALE. FOLLOW DIMENSIONS.

JACKSON COUNTY A-610R1

STATE	PROJ. NO.	SHEET NO.
MO.		312

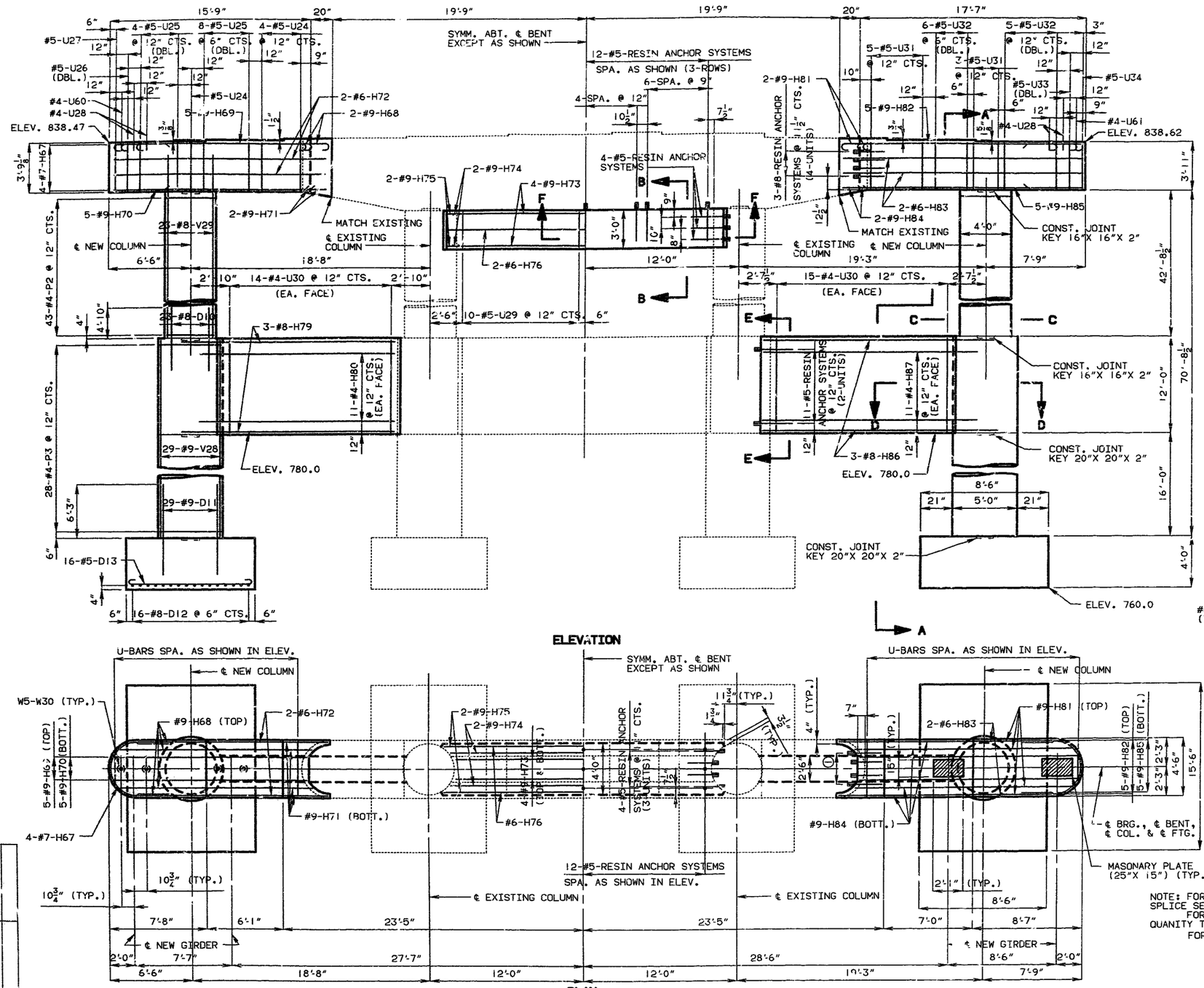

SECTION B-B

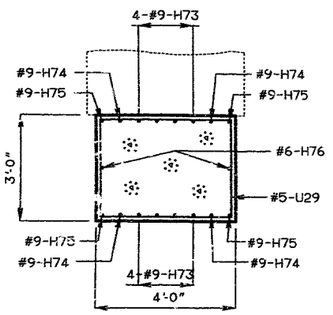

SECTION C-C

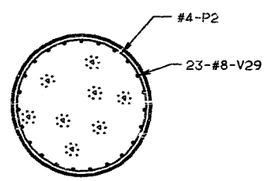

SECTION D-D

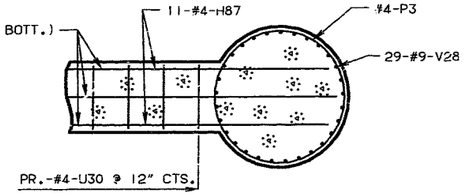

ELEVATION

PLAN

① 4-#8-RESIN ANCHOR SYSTEMS @ 9½" CTS. (3-UNITS)

NOTE: FOR DETAILS OF RESIN ANCHOR SYSTEMS AND DETAILS OF STEEL PILE SPLICE SEE SHEET NO. 22.
FOR SECTION A-A, E-E, F-F, PLAN OF FOOTING AND SUBSTRUCTURE QUANITY TABLE FOR BENT NO. 3 SEE SHEET. NO. 16.
FOR DETAILS OF ANCHOR BOLT WELLS SEE SHEET NO. 32.

300 33

REVISED:

DETAILED JULY 1993
CHECKED AUG. 1993

DETAILS OF INTERMEDIATE BENT NO. 3 (W.B.L.)

NOTE: THIS DRAWING IS NOT TO SCALE. FOLLOW DIMENSIONS.

JACKSON COUNTY A-6101

STATE	PROJ. NO.	SHEET NO.
MO.		313

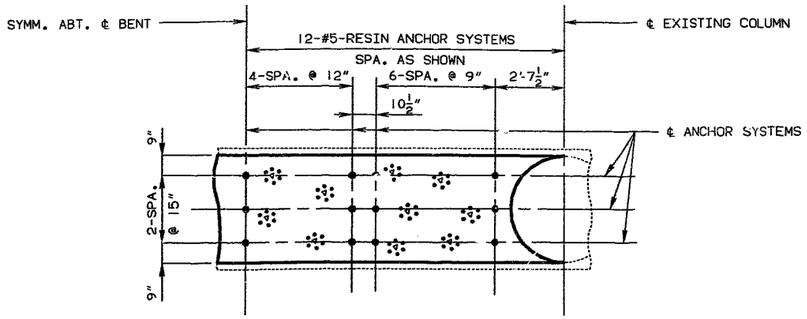

SECTION F-F

(NOTE: SECTION SHOWING RESIN ANCHOR SYSTEMS)

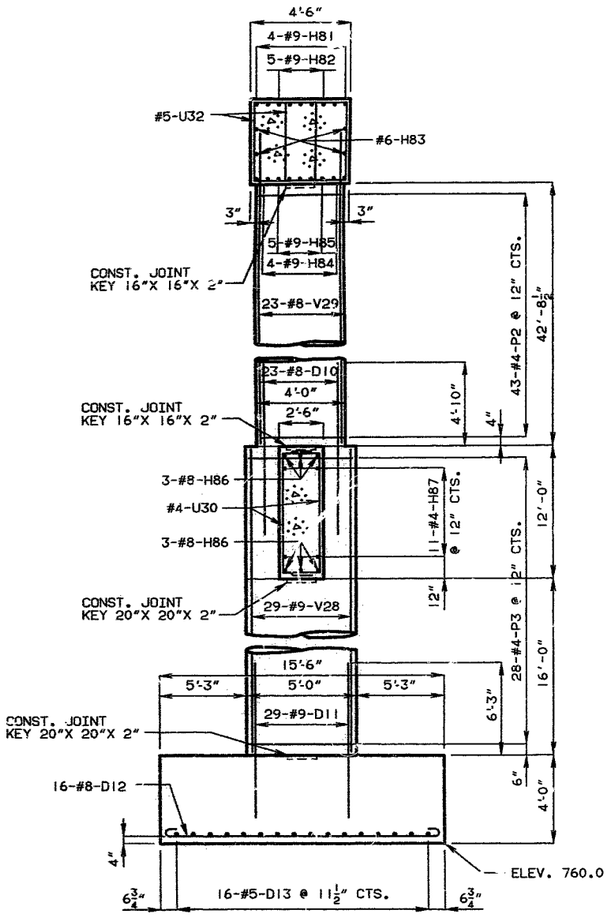

SECTION A-A

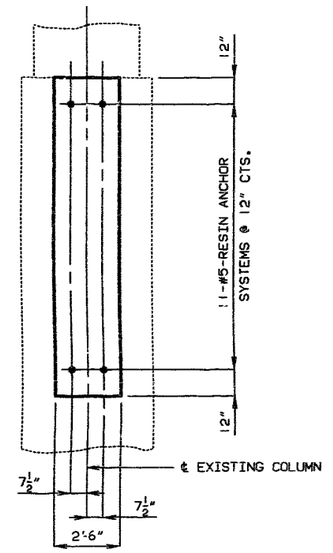

SECTION E-E

(NOTE: SECTION SHOWING RESIN ANCHOR SYSTEMS)

NOTE: FOR LOCATION OF SECTIONS A-A, E-E AND F-F SEE SHEET NO. 15.

SUBSTRUCTURE QUANTITY TABLE FOR BENT NO. 3		
ITEM		**QUANTITY**
CLASS 1 EXCAVATION	CU. YDS.	195
CLASS 2 EXCAVATION	CU. YDS.	142
CLASS B CONCRETE (SUBSTR.)	CU. YDS.	182.0
REINFORCING STEEL (BRIDGES)	LBS.	23880

NOTE: WORK THIS TABLE WITH ESTIMATED QUANTITIES AS SHOWN ON SHEET NO. 2.

330 301

REVISED:

DETAILED AUG. 1993
CHECKED AUG. 1993

DETAILS OF INTERMEDIATE BENT NO. 3 (W.B.L.)

NOTE: THIS DRAWING IS NOT TO SCALE. FOLLOW DIMENSIONS.

JACKSON COUNTY A-610R1

STATE	PROJ. NO.	SHEET NO.
MO.		314

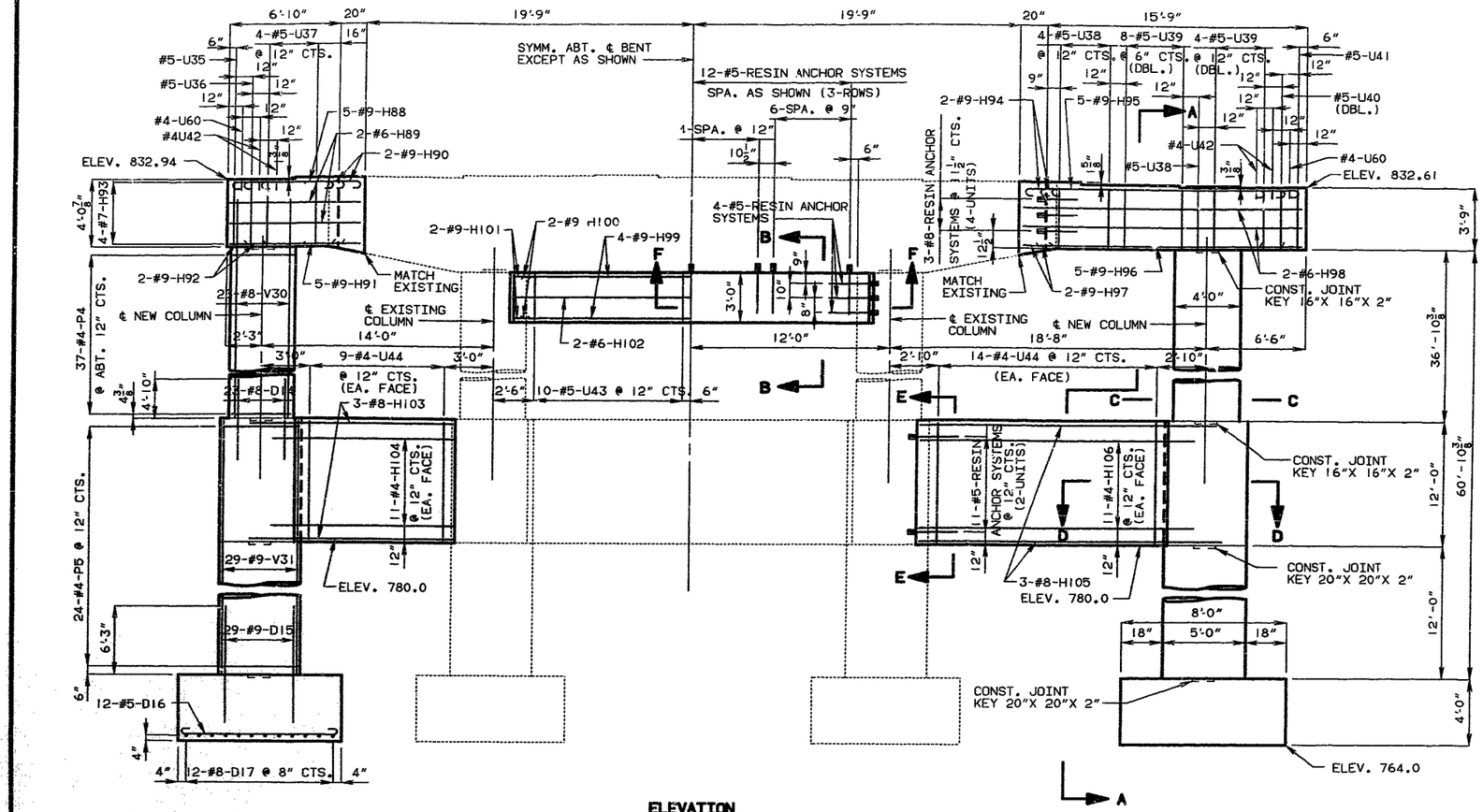

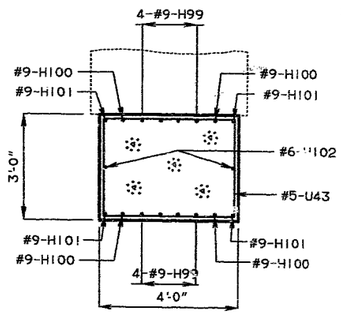

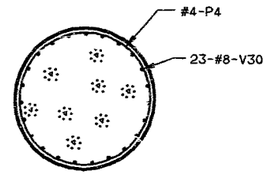

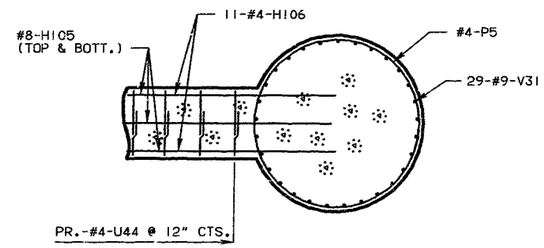

① 4-#8-RESIN ANCHOR SYSTEMS @ 9½" CTS. (3-UNITS)

NOTE: FOR DETAILS OF RESIN ANCHOR SYSTEMS SEE SHEET NO. 22.
FOR SECTION A-A, E-E, F-F AND SUBSTRUCTURE QUANITY TABLE FOR BENT NO. 3 SEE SHEET NO. 18.
FOR DETAILS OF ANCHOR BOLT WELLS SEE SHEET NO. 32.

33-302

REVISED:

DETAILED JUNE 1993
CHECKED JULY 1993

DETAILS OF INTERMEDIATE BENT NO. 4 (E.B.L.)

NOTE: THIS DRAWING IS NOT TO SCALE. FOLLOW DIMENSIONS.

JACKSON COUNTY A-610R1

STATE	PROJ. NO.	SHEET NO.
MO.		315

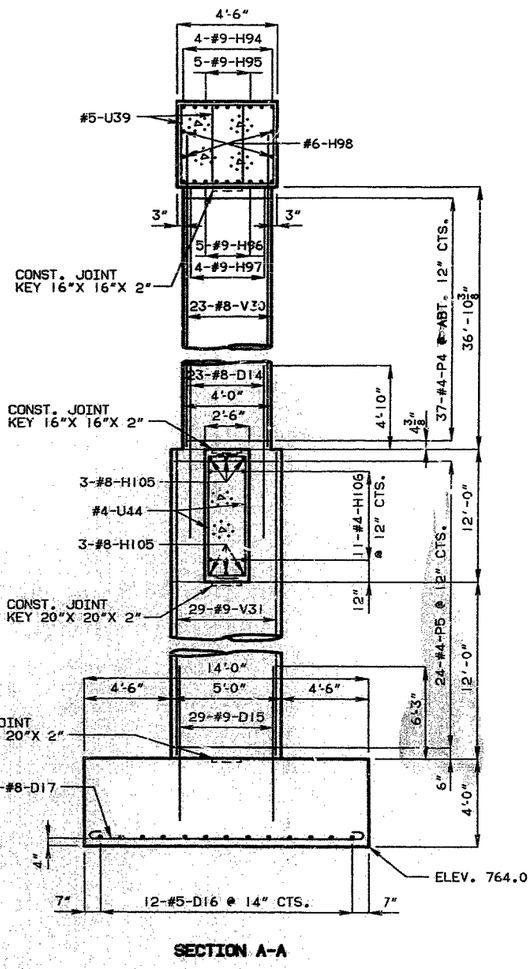

SECTION A-A

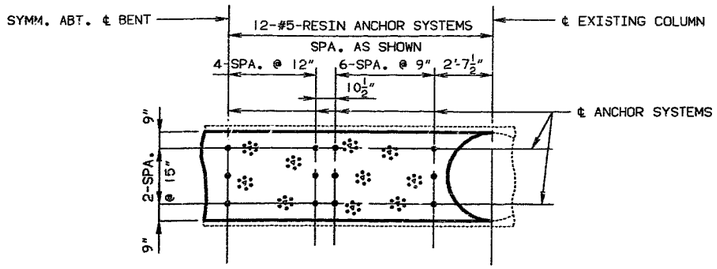

SECTION F-F

(NOTE: SECTION SHOWING RESIN ANCHOR SYSTEMS)

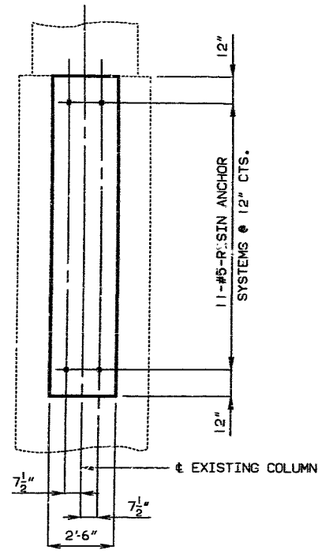

SECTION E-E

(NOTE: SECTION SHOWING RESIN ANCHOR SYSTEMS)

NOTE: FOR LOCATION OF SECTIONS A-A, E-E AND F-F SEE, SHEET NO. 17.

SUBSTRUCTURE QUANTITY TABLE FOR BENT NO. 4		
ITEM		**QUANTITY**
CLASS I EXCAVATION	CU. YDS.	235
CLASS 2 EXCAVATION	CU. YDS.	69
CLASS B CONCRETE (SUBSTR.)	CU. YDS.	152.0
REINFORCING STEEL (BRIDGES)	LBS.	20250

NOTE: WORK THIS TABLE WITH ESTIMATED QUANTITIES AS SHOWN ON SHEET NO. 2.

REVISED

DETAILED JUNE 1993
CHECKED JULY 1993

DETAILS OF INTERMEDIATE BENT NO. 4 (E.B.L.)

NOTE: THIS DRAWING IS NOT TO SCALE. FOLLOW DIMENSIONS.

JACKSON COUNTY A-6101

STATE	PROJ. NO.	SH NO.
MO.		316

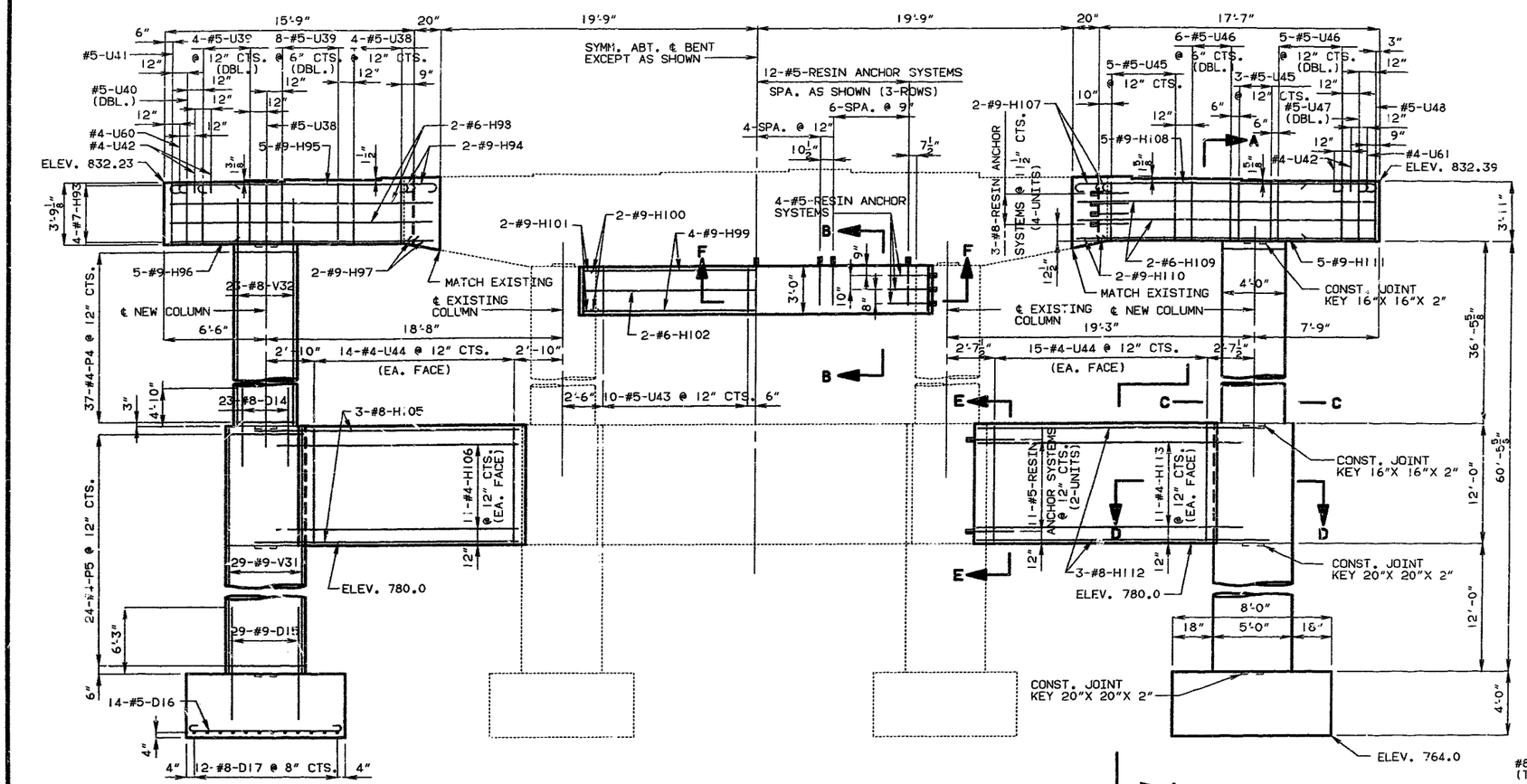

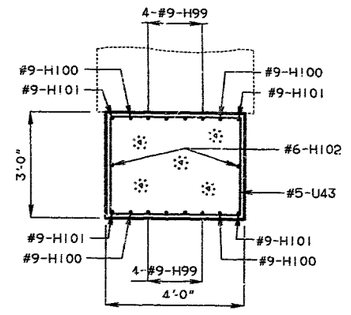

SECTION B-B

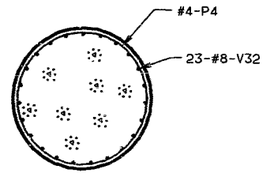

SECTION C-C

ELEVATION

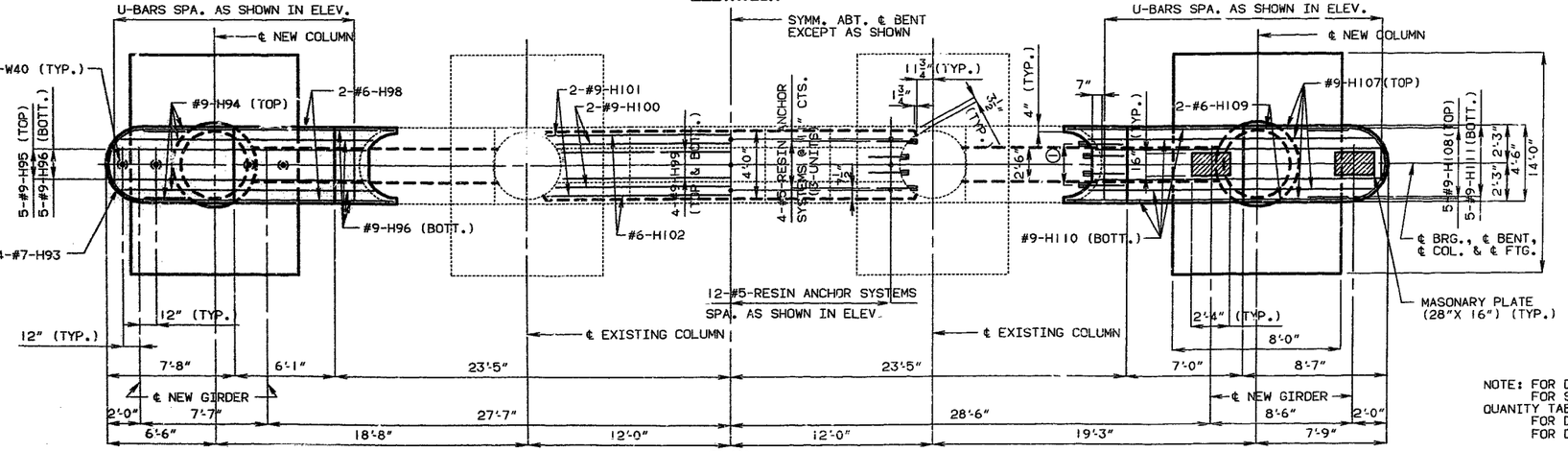

PLAN

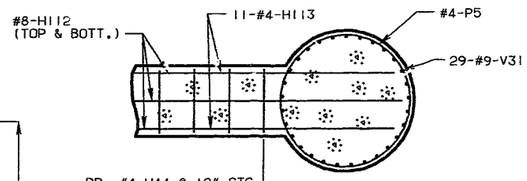

SECTION D-D

① 4-#8-RESIN ANCHOR SYSTEMS @ 9½" CTS. (3-UNITS)

NOTE: FOR DETAILS OF RESIN ANCHOR SYSTEMS SEE SHEET NO. 22.
FOR SECTION A-A, E-E, F-F, PLAN OF FOOTING AND SUBSTRUCTURE QUANITY TABLE FOR BENT NO. 4 SEE SHEET NO. 20.
FOR DETAILS OF STEEL PILE SPLICE SEE SHEET NO. 22.
FOR DETAILS OF ANCHOR BOLT WELLS SEE SHEET NO. 32.

DETAILS OF INTERMEDIATE BENT NO. 4 (W.B.L.)

REVISED:

DETAILED JULY 1993
CHECKED AUG. 1993

NOTE: THIS DRAWING IS NOT TO SCALE. FOLLOW DIMENSIONS.

JACKSON COUNTY A-610R1

STATE	PROJ. NO.	SHEET NO.
MO.		317

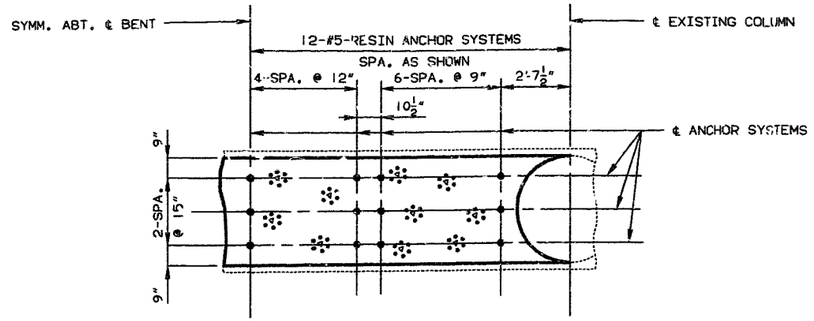

SECTION F-F

(NOTE: SECTION SHOWING RESIN ANCHOR SYSTEMS)

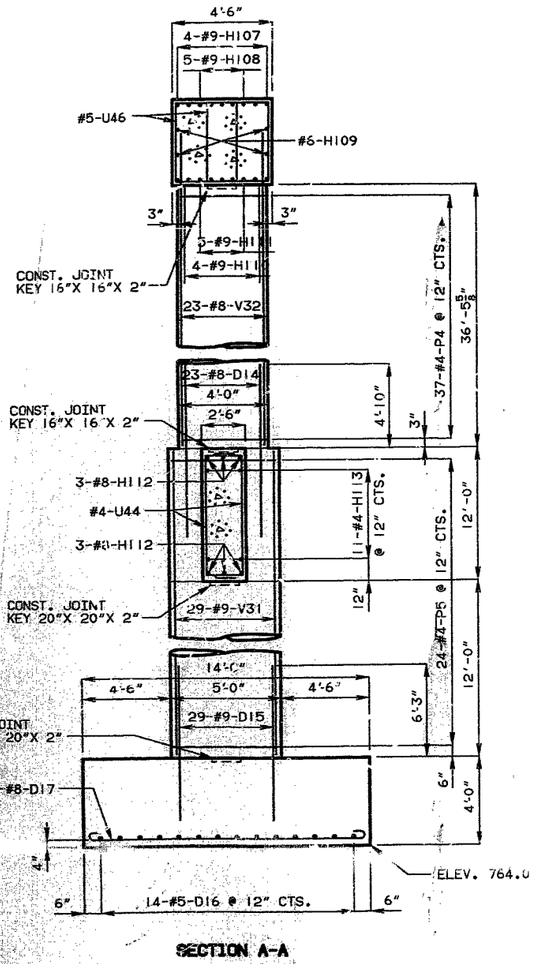

SECTION A-A

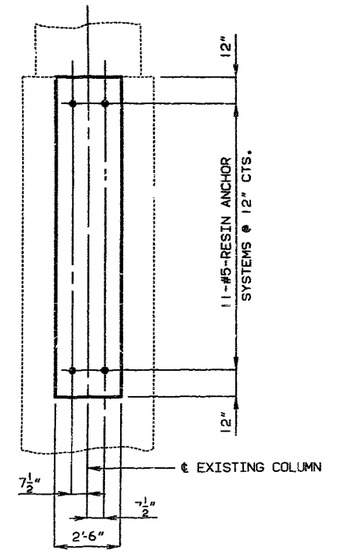

SECTION E-E

(NOTE: SECTION SHOWING RESIN ANCHOR SYSTEMS)

NOTE: FOR LOCATION OF SECTIONS A-A, E-E AND F-F SEE SHEET NO. 19.

SUBSTRUCTURE QUANTITY TABLE FOR BENT NO. 4		
ITEM		QUANTITY
CLASS I EXCAVATION	CU. YDS.	235
CLASS 2 EXCAVATION	CU. YDS.	69
CLASS B CONCRETE (SUBSTR.)	CU. YDS.	164.6
REINFORCING STEEL (BRIDGES)	LBS.	22010

NOTE: WORK THIS TABLE WITH ESTIMATED QUANTITIES SHOWN ON SHEET NO. 2.

342-305

REVISED:

DETAILED AUG. 1993
CHECKED AUG. 1993

DETAILS OF INTERMEDIATE BENT NO. 4 (W.B.L.)

NOTE: THIS DRAWING IS NOT TO SCALE. FOLLOW DIMENSIONS.

JACKSON COUNTY A-610R1

STATE	PROJ. NO.	SHEET NO.
MO.		

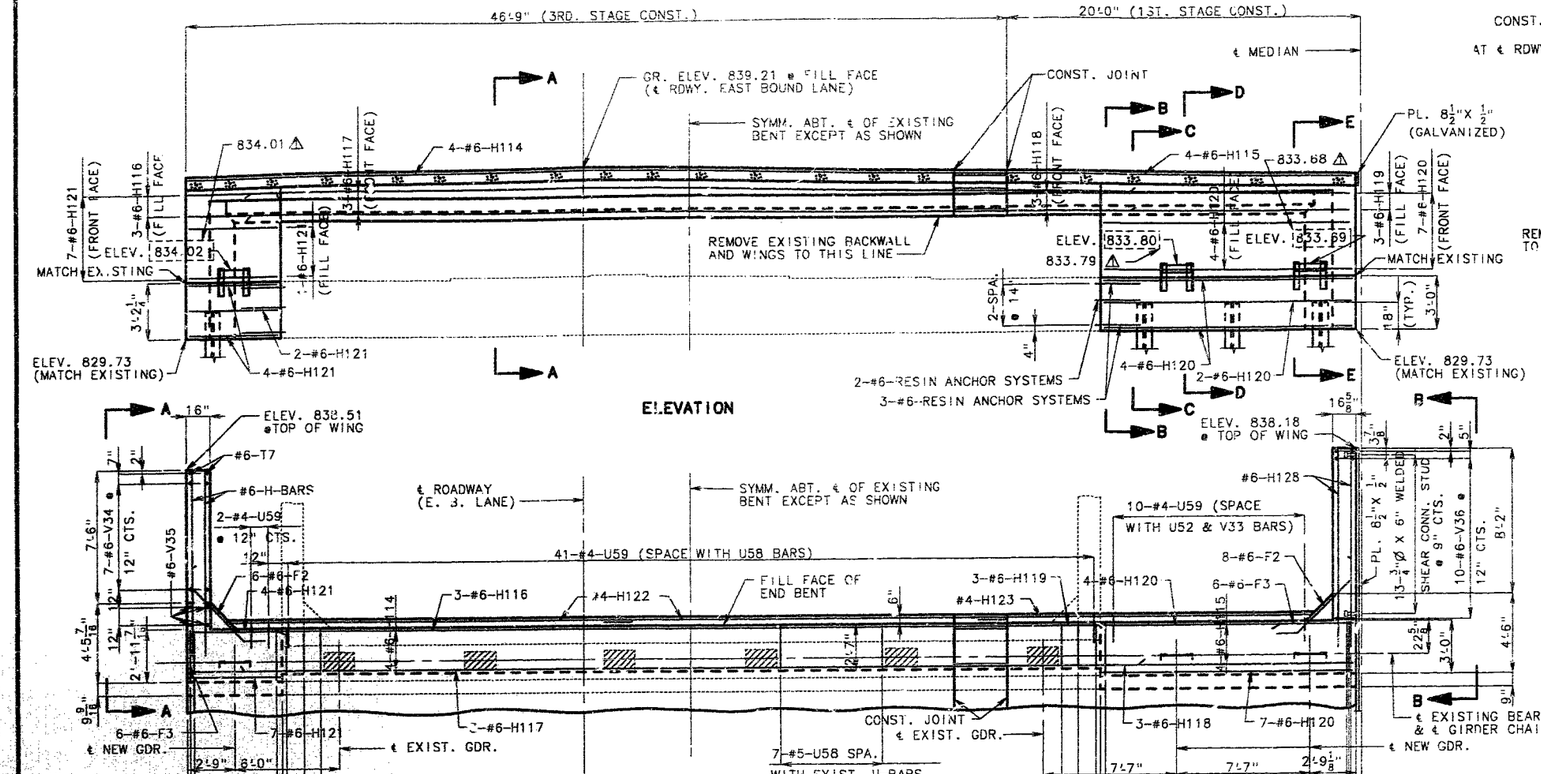

NOTE: FOR ELEVATION A-A, B-B, DETAILS OF RESIN ANCHOR SYSTEMS, KEY, STEEL PILE SPLICE AND SUBSTRUCTURE QUANITY TABLE SEE SHEET NO. 22.
FOR DETAILS AND REINFORCEMENT OF SAFETY BARRIER CURB SEE SHEETS NO. 40, 41 & 43.
SHIFT REINFORCING STEEL TO CLEAR THE ANGLES OF THE SUPPORT CHAIRS.
FIELD BENDING SHALL BE REQUIRED FOR #6-F BARS WHEN NECESSARY TO CONFORM TO SLOPE OF WING.
* FIELD DRILL 3-1 1/8" Ø HOLES IN EXISTING GIRDERS. COST OF FIELD DRILLING HOLES IN EXISTING GIRDERS SHALL BE INCLUDED IN THE CONTRACT UNIT PRICE FOR PARTIAL REMOVAL OF SUBSTRUCTURE CONCRETE.
FOR DETAILS OF SUPPORT CHAIR SEE SHEET NO. 29.

DETAILS OF END BENT NO. 5
(EAST BOUND LANE)

306

REVISED:

DETAILED APRIL 1993
CHECKED JUNE 1993

NOTE: THIS DRAWING IS NOT TO SCALE. FOLLOW DIMENSIONS.

△ Revised 5/19/94

SHEET NO. 21 OF 51.

JACKSON COUNTY

A-610R1

STATE	PROJ. NO.	SHEET NO.
MO.		319

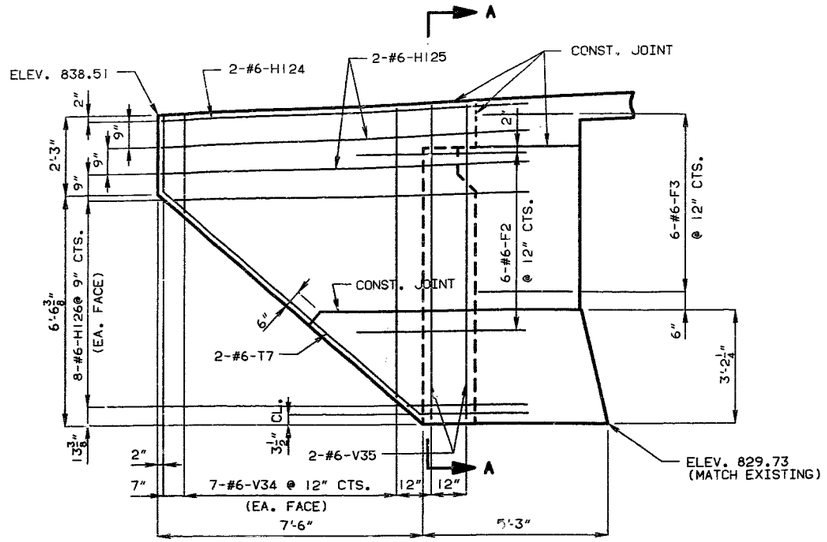

ELEVATION A-A

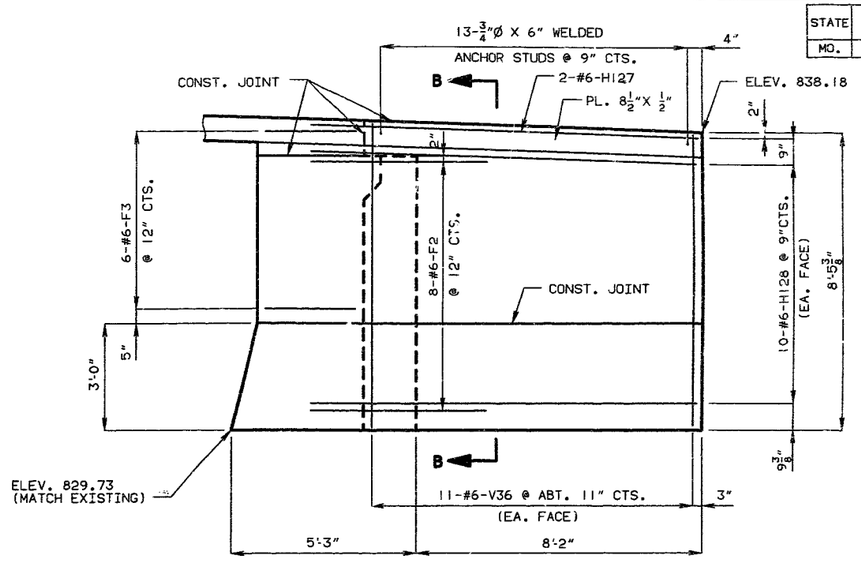

ELEVATION B-B

NOTE: COST OF FURNISHING AND INSTALLING RESIN ANCHOR SYSTEMS SHALL BE INCLUDED IN THE CONTRACT UNIT PRICE FOR CONCRETE.
SEE SPECIAL PROVISIONS FOR ACCEPTABLE RESIN ANCHOR SYSTEMS. THESE RESIN ANCHOR SYSTEMS SHALL BE INSTALLED ACCORDING TO THE MANUFACTURER'S SPECIFICATIONS EXCEPT AS MODIFIED BY THE JOB SPECIAL PROVISIONS AND THAT AN EPOXY COATED #6, GRADE 60 REINFORCING BAR PROJECTING 15" (EXCEPT AT APPROACH HAUNCH 7 1/2") INTO NEW CONCRETE SHALL BE USED.
A ① EPOXY COATED STRAIGHT REINFORCING BAR MAY BE SUBSTITUTED FOR A ② HOOKED BAR AS SHOWN ON PLANS.

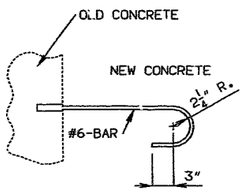

DETAIL OF RESIN ANCHOR SYSTEM

BAR SIZE & LENGTH	
①	②
#5	21"
#6	2'-3"
#8	4'-0"

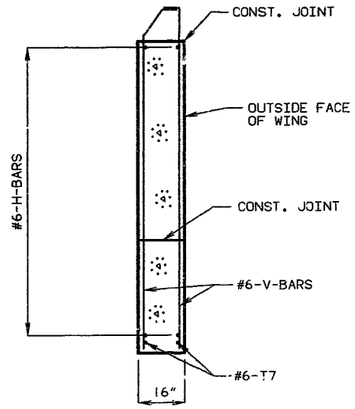

SECTION A-A

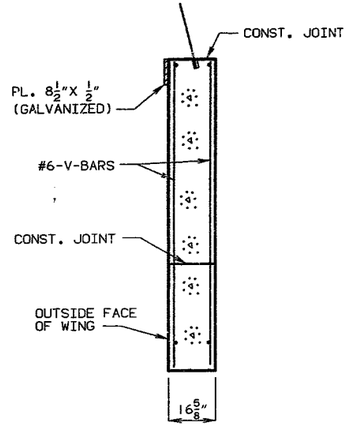

SECTION B-B

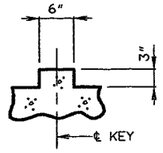

SECTION THRU KEY

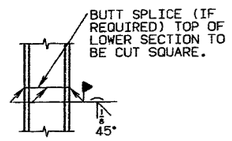

STEEL PILE SPLICE

SUBSTRUCTURE QUANTITY TABLE FOR BENT NO. 1		
ITEM		QUANTITY
CLASS 1 EXCAVATION	CU. YDS.	35
STRUCTURAL STEEL PILES (10")	LIN. FT.	272
CLASS B CONCRETE (SUBSTR.)	CU. YDS.	10.0

NOTE: THESE QUANTITIES ARE INCLUDED IN THE ESTIMATED QUANTITIES TABLE ON SHEET NO. 2.

NOTE: CONCRETE DIAPHRAGMS SHALL BE POURED PRIOR TO THE SLAB, ALLOWING SUFFICIENT TIME FOR THE SET OF THE CONCRETE IN THE DIAPHRAGMS.
ALL CONCRETE IN THE END BENT ABOVE TOP OF BEAM AND BELOW TOP OF SLAB SHALL BE CLASS B2.
THE AREA EXPOSED BY THE REMOVAL OF CONCRETE AND NOT COVERED WITH NEW CONCRETE SHALL BE COATED WITH AN APPROVED BITUMINOUS PAINT.

3466 307

REVISED:

DETAILED APRIL 1993
CHECKED JUNE 1993

DETAILS OF END BENT NO. 5
(EAST BOUND LANE)

NOTE: THIS DRAWING IS NOT TO SCALE. FOLLOW DIMENSIONS.

STATE	PROJ. NO.	SHEET NO.
MO.		

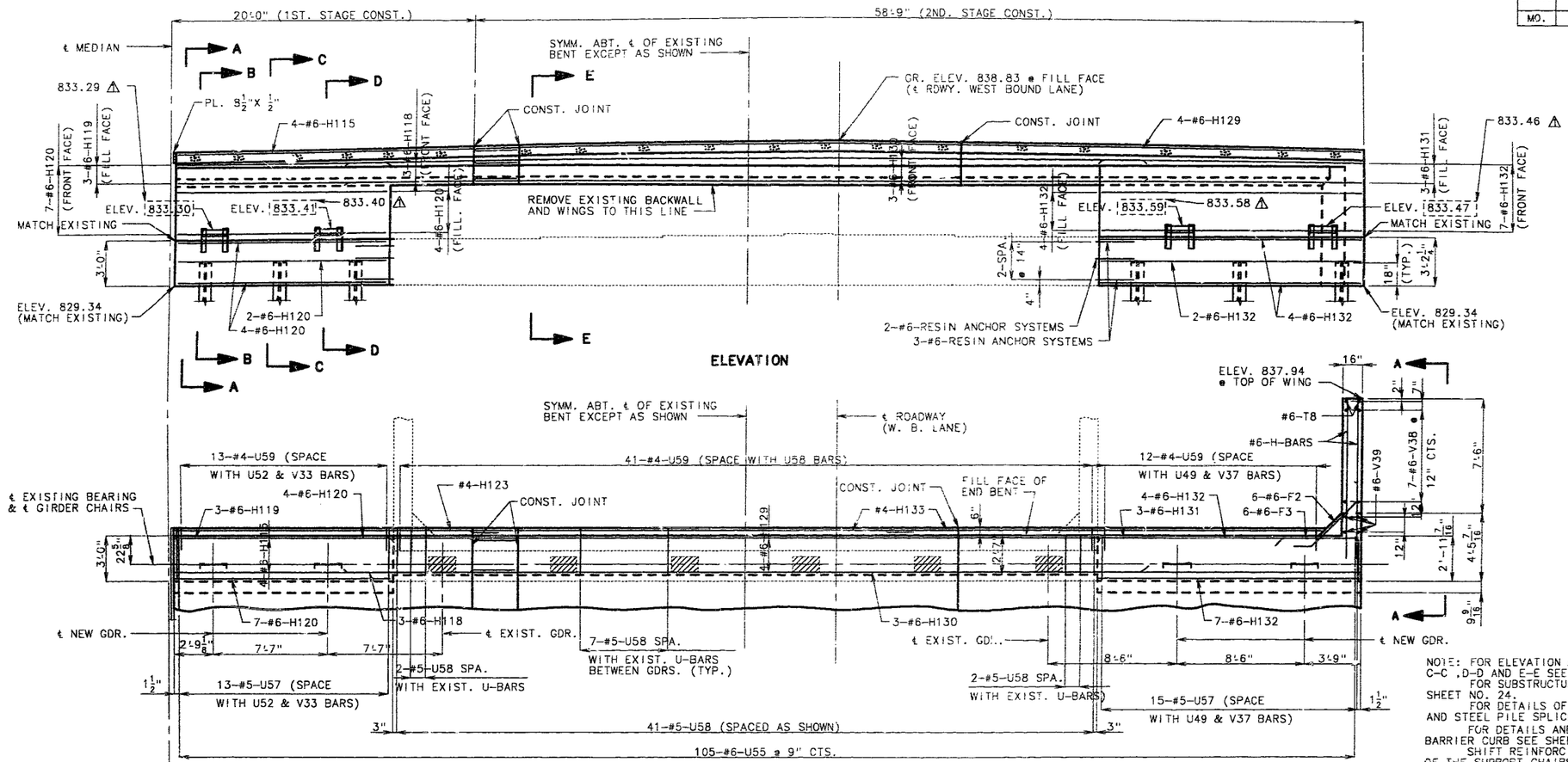

NOTE: FOR ELEVATION A-A AND SECTION A-A, B-B, C-C ,D-D AND E-E SEE SHEET NO. 24.
FOR SUBSTRUCTURE QUANITY TABLE SEE SHEET NO. 24.
FOR DETAILS OF RESIN ANCHOR SYSTEMS, KEY AND STEEL PILE SPLICE SEE SHEET NO. 22.
FOR DETAILS AND REINFORCEMENT OF SAFETY BARRIER CURB SEE SHEETS NO. 41, 42 & 43.
SHIFT REINFORCING STEEL TO CLEAR THE ANGLES OF THE SUPPORT CHAIRS.
FIELD BENDING SHALL BE REQUIRED FOR #6-F BARS WHEN NECESSARY TO CONFORM TO SLOPE OF WIN
FOR DETAILS OF SUPPORT CHAIR SEE SHEET NO. 29.

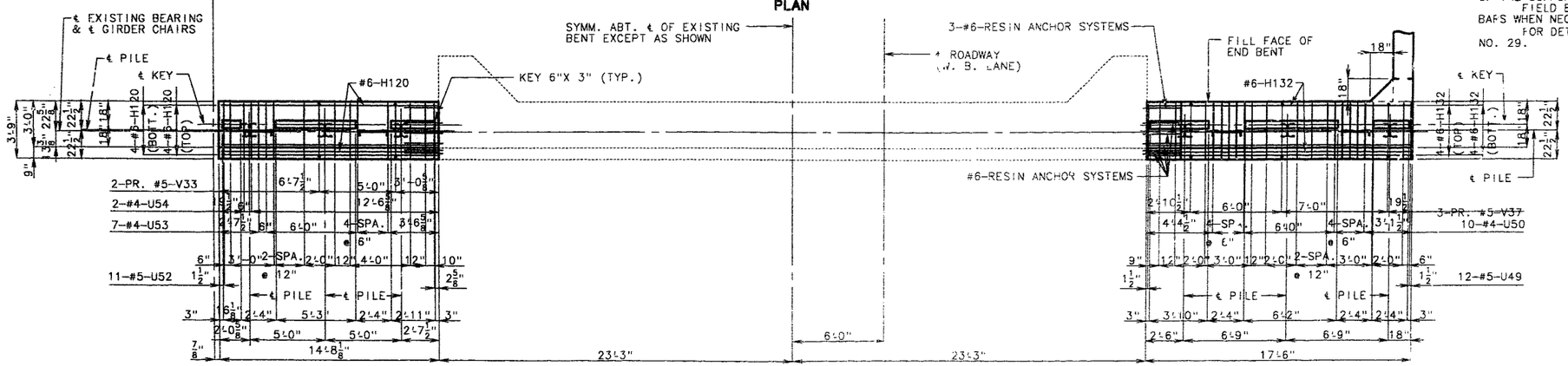

PLAN OF BEAM

DETAILS OF END BENT NO. 5
(WEST BOUND LANE)

⚠ Revised 5/19/94

DETAILED APRIL 1993
CHECKED JUNE 1993

NOTE: THIS DRAWING IS NOT TO SCALE. FOLLOW DIMENSIONS.

SHEET NO. 23 OF 51.

JACKSON COUNTY A-610R1

308

REVISED:

STATE	PROJ. NO.	SHEET NO.
MO.		321

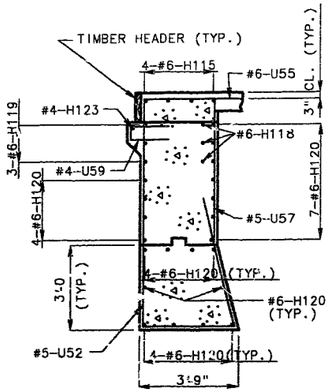

SECTION A-A

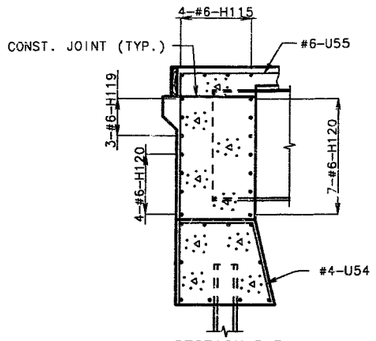

SECTION B-B

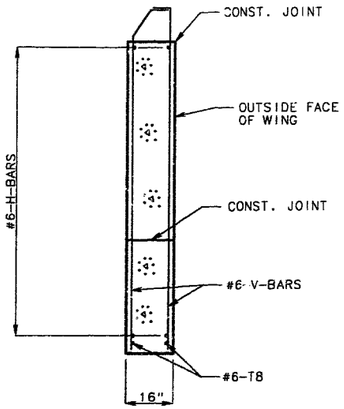

SECTION THRU WING

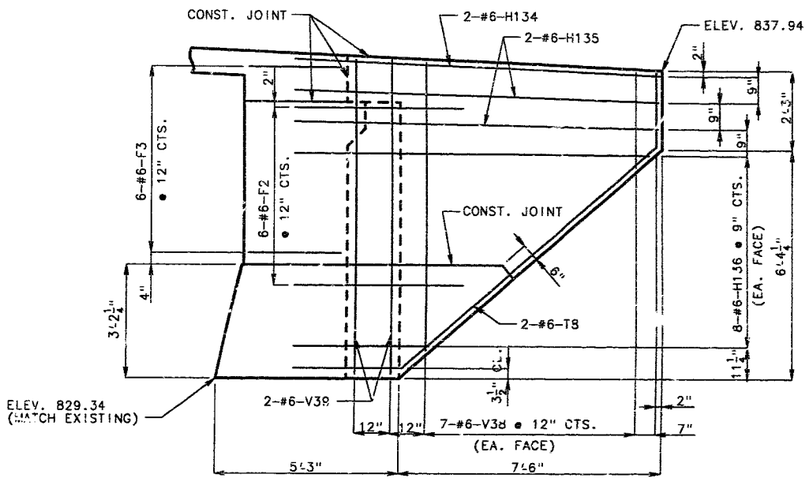

ELEVATION A-A

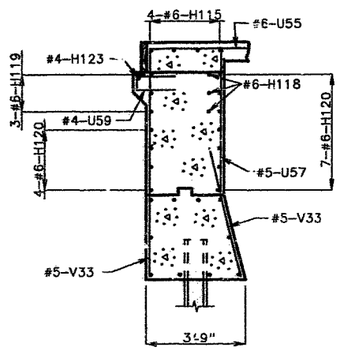

SECTION C-C

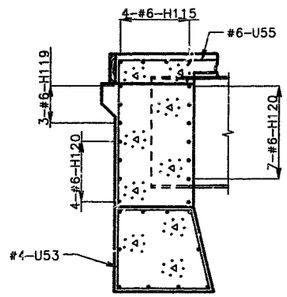

SECTION D-D

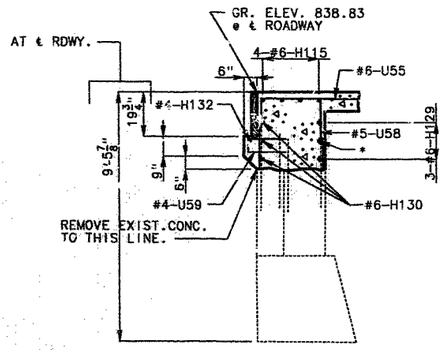

SECTION E-E

SUBSTRUCTURE QUANTITY TABLE FOR BENT NO. 5		
ITEM		QUANTITY
CLASS 1 EXCAVATION	CU. YDS.	30
STRUCTURAL STEEL PILES (10")	LIN. FT.	402
CLASS B CONCRETE (SUBSTR.)	CU. YDS.	13.1

NOTE: THESE QUANTITIES ARE INCLUDED IN THE ESTIMATED QUANTITIES TABLE ON SHEET NO. 2.

NOTE: CONCRETE DIAPHRAGMS SHALL BE POURED PRIOR TO THE SLAB, ALLOWING SUFFICIENT TIME FOR THE SET OF THE CONCRETE IN THE DIAPHRAGMS.
ALL CONCRETE IN THE END BENT ABOVE TOP OF BEAM AND BELOW TOP OF SLAB SHALL BE CLASS B2.
THE AREA EXPOSED BY THE REMOVAL OF CONCRETE AND NOT COVERED WITH NEW CONCRETE SHALL BE COATED WITH AN APPROVED BITUMINOUS PAINT.
* FIELD DRILL 3-1 1/8" Ø HOLES IN EXISTING GIRDERS. COST OF FIELD DRILLING HOLES IN EXISTING GIRDERS SHALL BE INCLUDED IN THE CONTRACT UNIT PRICE FOR PARTIAL REMOVAL OF SUBSTRUCTURE CONCRETE.

DETAILS OF END BENT NO. 5
(WEST BOUND LANE)

309

REVISED

DETAILED APRIL 1993
CHECKED JUNE 1993

NOTE: THIS DRAWING IS NOT TO SCALE. FOLLOW DIMENSIONS.

STATE	PROJ. NO.	SHEET NO.
MO.		322

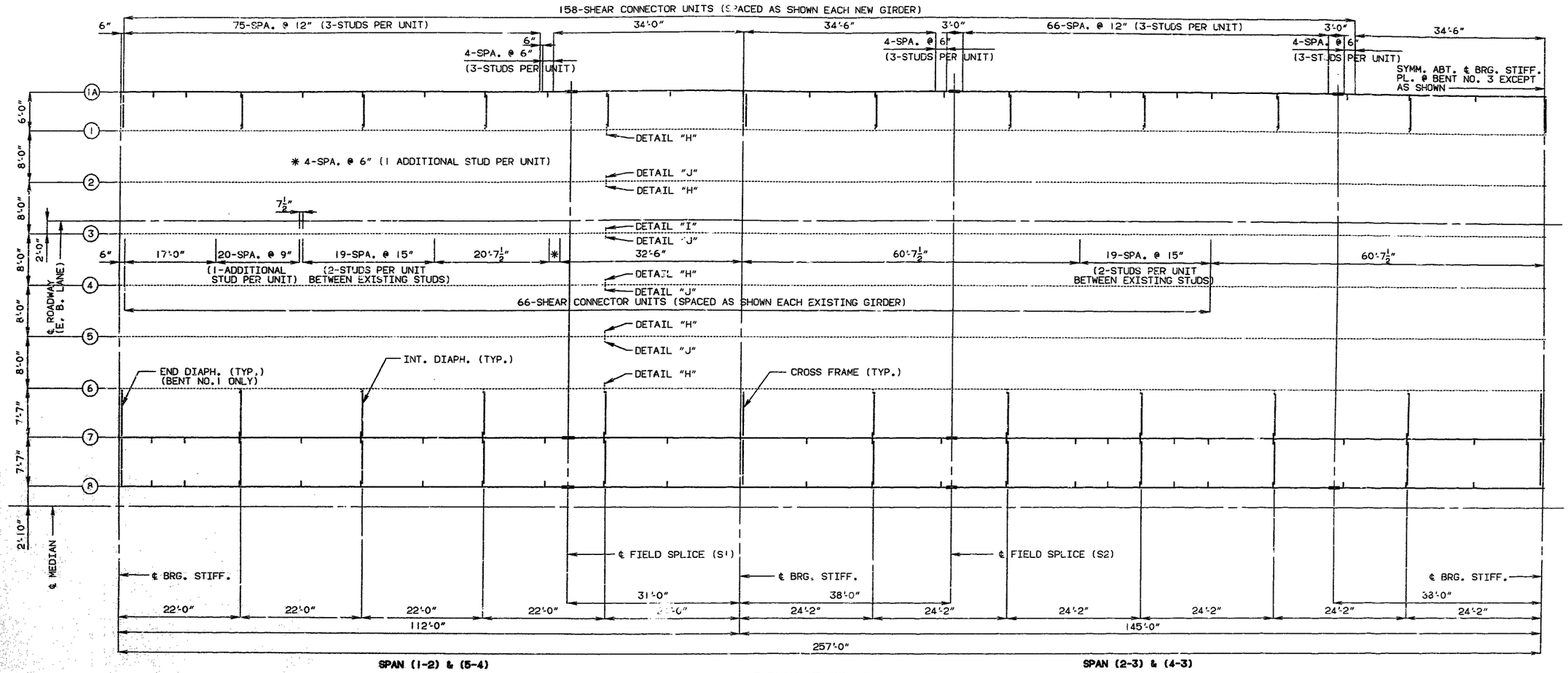

PART PLAN OF STRUCTURAL STEEL
(EAST BOUND LANE)

NOTE: LONGITUDINAL DIMENSIONS SHOWN ARE TAKEN PARALLEL TO GRADE AT CROWN OF ROADWAY.

COST OF DRILLING HOLES IN EXISTING STRUCTURAL STEEL SHALL BE INCLUDED IN THE CONTRACT UNIT PRICE FOR FABRICATED STRUCTURAL CARBON STEEL.

INTERMEDIATE WEB STIFFENER PLATE AND DIAPHRAGM SPACING MAY VARY FROM PLAN DIMENSIONS BY A MAXIMUM OF 3" FOR DIAPHRAGM TO CONNECT TO THE INTERMEDIATE WEB STIFFENER PLATE.

FOR DETAILS OF DIAPHRAGMS SEE SHEETS NO. 30 & 31.

FOR DETAILS OF SHEAR CONNECTORS SEE SHEET NO. 29.

DETAIL "H", "I" AND "J" SHOWN ARE TYPICAL FOR ALL INTERMEDIATE DIAPHRAGMS ON EXISTING GIRDERS. SEE SHEET NO. 30 FOR DETAILS OF FLANGE CONNECTION ANGLES AND BENT PLATE.

322

REVISED

DETAILED SEPT. 1992
CHECKED MAY 1993

STATE	PROJ. NO.	SHEET NO.
MO.		323

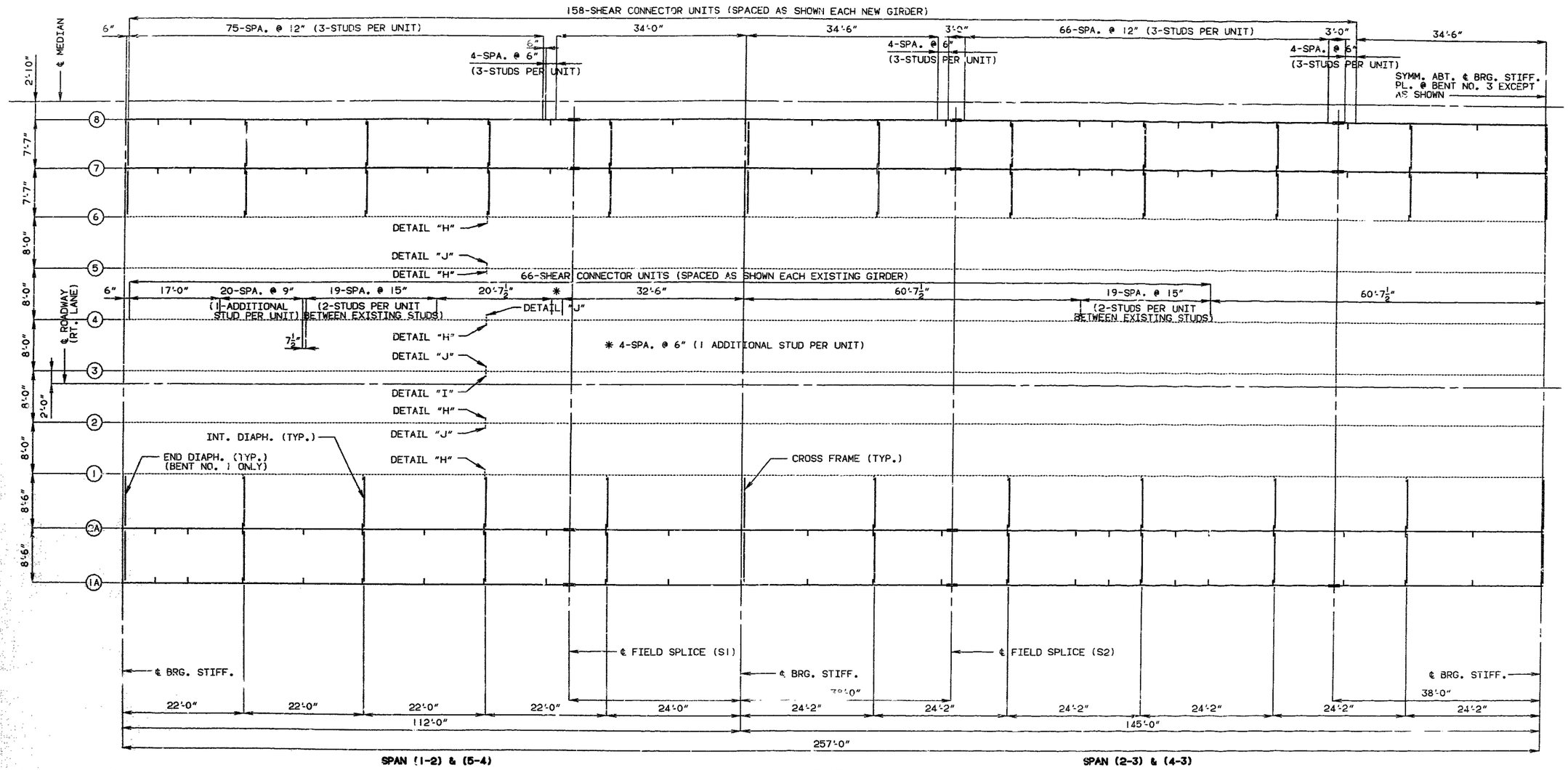

PART PLAN OF STRUCTURAL STEEL
(WEST BOUND LANE)

NOTE: LONGITUDINAL DIMENSIONS SHOWN ARE TAKEN PARALLEL TO GRADE AT CROWN OF ROADWAY.

COST OF DRILLING HOLES IN EXISTING STRUCTURAL STEEL SHALL BE INCLUDED IN THE CONTRACT UNIT PRICE FOR FABRICATED STRUCTURAL CARBON STEEL.

INTERMEDIATE WEB STIFFENER PLATE AND DIAPHRAGM SPACING MAY VARY FROM PLAN DIMENSIONS BY A MAXIMUM OF 3" FOR DIAPHRAGM TO CONNECT TO THE INTERMEDIATE WEB STIFFENER PLATE.

FOR DETAILS OF DIAPHRAGMS SEE SHEETS NO. 30 & 31.

FOR DETAILS OF SHEAR CONNECTORS SEE SHEET NO. 29.

DETAIL "H", "I" AND "J" SHOWN ARE TYPICAL FOR ALL INTERMEDIATE DIAPHRAGMS ON EXISTING GIRDERS. SEE SHEET NO. 30 FOR DETAILS OF FLANGE CONNECTION ANGLES AND BENT PLATE.

338-11

REVISED:

DETAILED SEPT. 1992
CHECKED JUNE 1993

NOTE: THIS DRAWING IS NOT TO SCALE. FOLLOW DIMENSIONS.

STATE	PROJ. NO.	SHEET NO.
MO.		

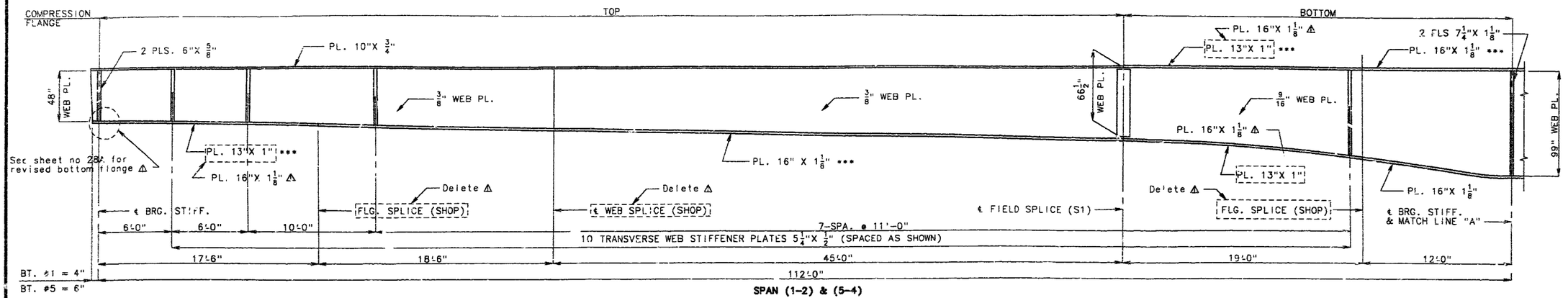

SPAN (1-2) & (5-4)

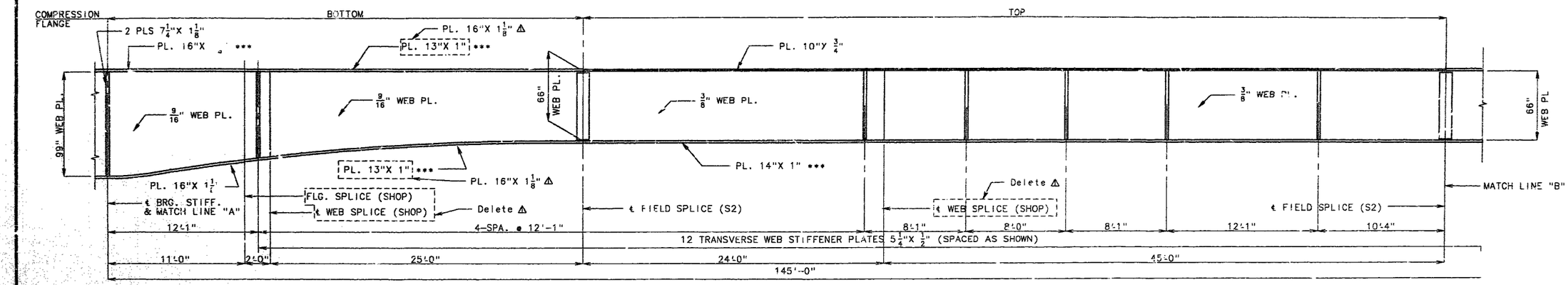

PART SPAN (2-3) & (4-3)

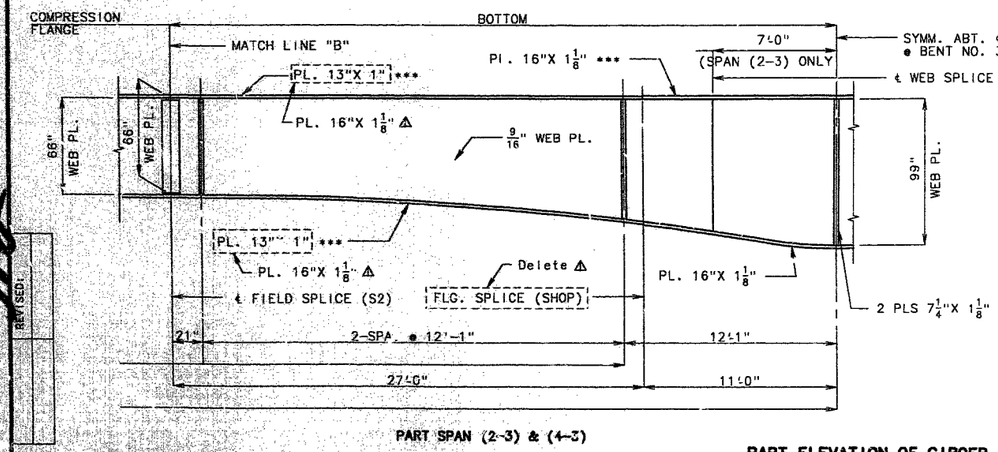

PART SPAN (2-3) & (4-3)

PART ELEVATION OF GIRDER

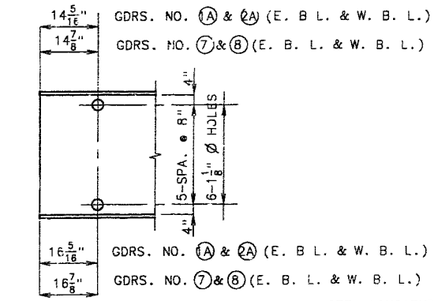

WEB HOLE DETAIL FOR NEW GIRDERS AT END BENT NO. 5

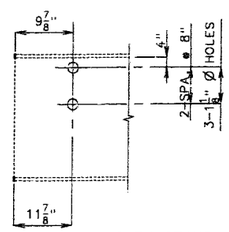

WEB HOLE DETAIL FOR EXISTING GIRDERS AT END BENT NO. 5

NOTE: LONGITUDINAL DIMENSIONS SHOWN ARE TAKEN PARALLEL TO GRADE AT CROWN OF ROADWAY.

*** INDICATES FLANGE PLATES SUBJECT TO NOTCH TOUGHNESS REQUIREMENTS. ALL WEB PLATES, WEB SPLICE PLATES AND FLANGE SPLICE PLATES SHALL BE SUBJECT TO NOTCH TOUGHNESS REQUIREMENTS.

PLATE GIRDER SHALL BE FABRICATED TO CONFORM TO THE CAMBER DIAGRAM SHOWN ON SHEET NO. 37 & 38.

TRANSVERSE WEB STIFFENERS SHALL BE LOCATED AS SHOWN IN PLAN OF STRUCTURAL STEEL.

FABRICATED STRUCTURAL STEEL SHALL BE A36, EXCEPT AS NOTED.

REVISED

⚠ Revised 5/19/94

DETAILED SEPT. 1992
CHECKED MAY 1993

NOTE: THIS DRAWING IS NOT TO SCALE. FOLLOW DIMENSIONS.

JACKSON COUNTY

A-610R1

STATE	PROJ. NO.	SHEET NO.
MO.		

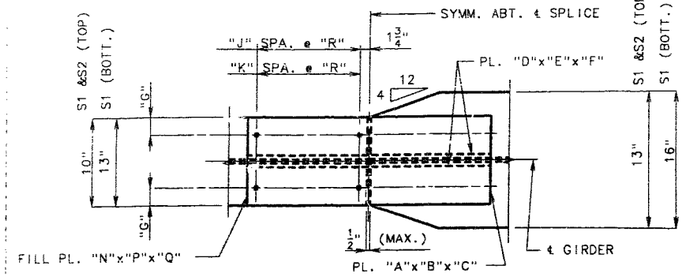

PLAN OF FLANGE
S1 & S2 (TOP) & S1 (BOTT.)

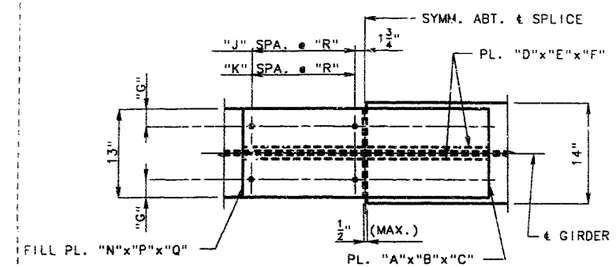

PLAN OF FLANGE
S2 (BOTT.)

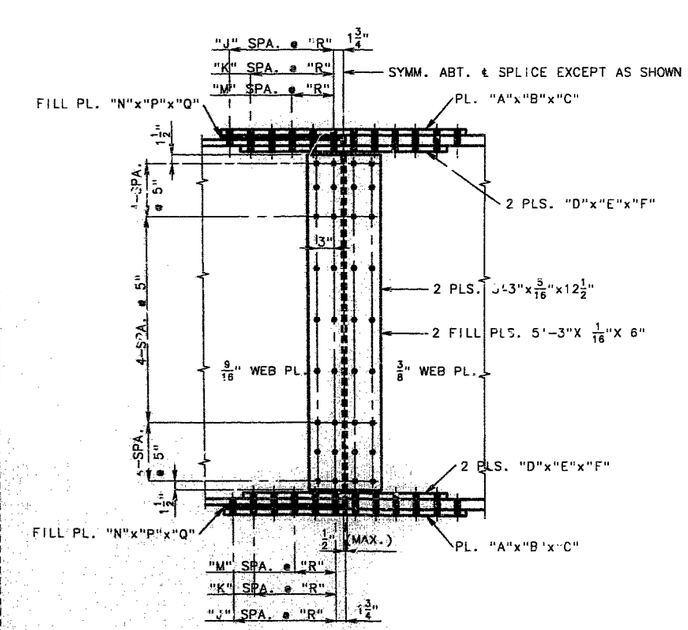

DETAIL OF BOLTED FIELD SPLICE

See sheet no. 28A for Details Of Bolted Field Splice ⚠

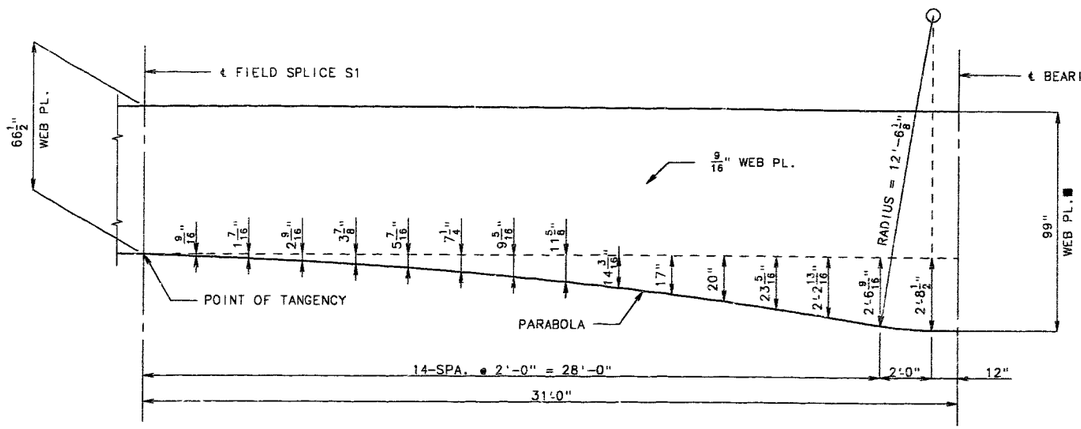

DETAIL OF GIRDER HAUNCH AT BENTS NO 2 & 4 (END SPANS)

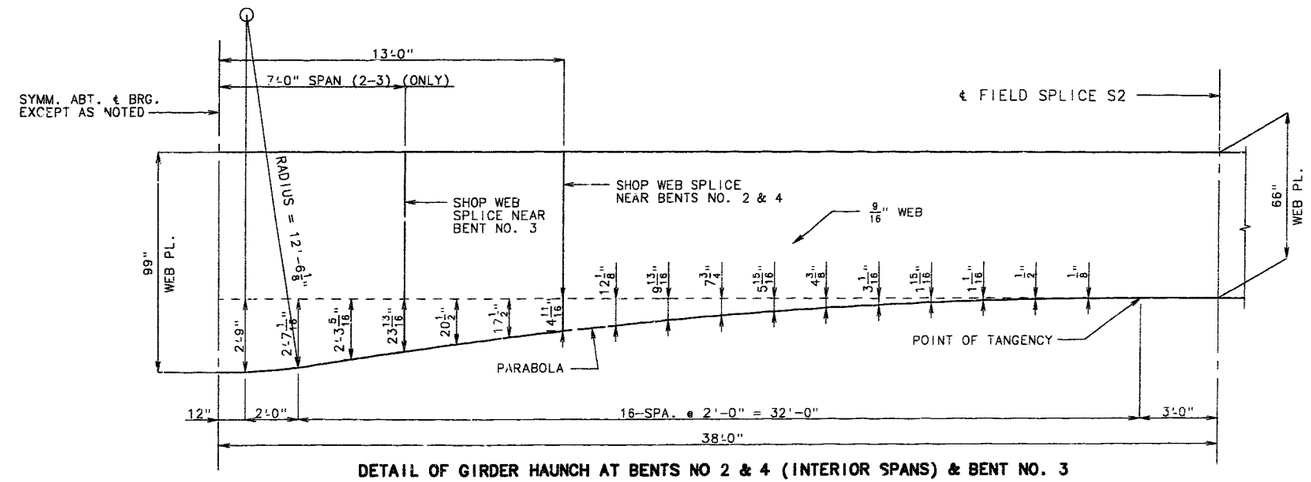

DETAIL OF GIRDER HAUNCH AT BENTS NO 2 & 4 (INTERIOR SPANS) & BENT NO. 3

SPLICE LOCATION	TABLE OF DIMENSIONS-FIELD SPLICE												
	"A"	"B"	"C"	"D"	"E"	"F"	"G"	"J"	"K"	"N"	"P"	"Q"	"R"
S1 & S2 (TOP)	10"	⅜"	18½"	4"	½"	18½"	2"	2	2	10"	¼"	9"	3"
S1 BOTT.	13"	½"	2'-6½"	5½"	⅝"	2'-6½"	2¾"	4	4	13"	⅛"	15"	3"
S2 BOTT.	13"	½"	2'-6½"	5½"	⅝"	2'-6½"	2¾"	4	4	–	–	–	3"

NOTE: USE ⅞" Ø HIGH STRENGTH BOLTS WITH 15/16" REAMED HOLES.
CONTACT SURFACES ARE TO BE BLAST CLEANED IN ACCORDANCE WITH SECTION 712.12.2.1 OF THE STANDARD SPECIFICATIONS.
USE ONE 5'3"X 1/16"X 6" FILL PLATE ON EACH SIDE OF ⅜" WEB.

⚠ Revised 5/19/94

SPL. PL. JPG 3.42 A36.1.A
FIELD SPLICE REVISED: MAR. 1992

DETAILED SEPT.1992
CHECKED MAY 1993

NOTE: THIS DRAWING IS NOT TO SCALE. FOLLOW DIMENSIONS.

JACKSON COUNTY A-610R1

STATE	PROJ. NO.	SHEET NO.
MO.		

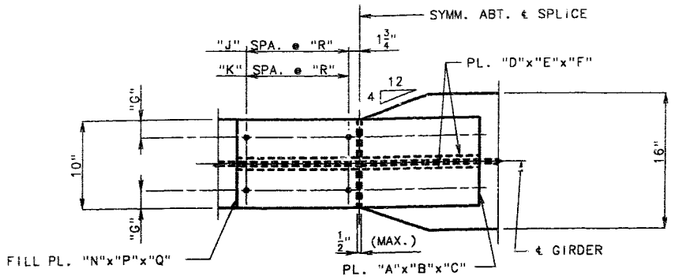

PLAN OF FLANGE
S1 & S2 (TOP)

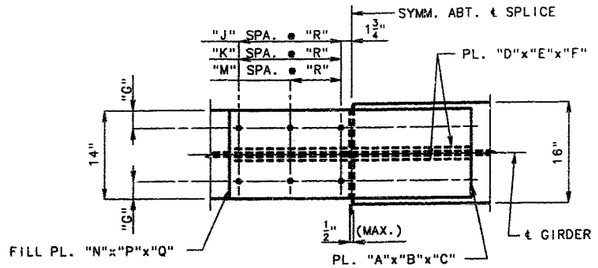

PLAN OF FLANGE
S2 (BOTT.)

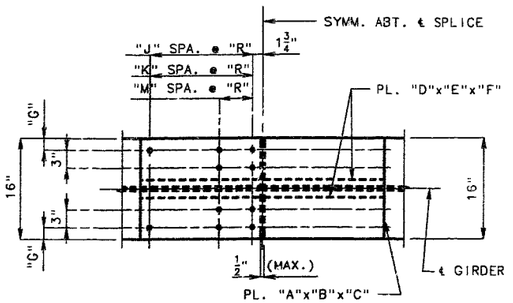

PLAN OF FLANGE
S1 (BOTT.)

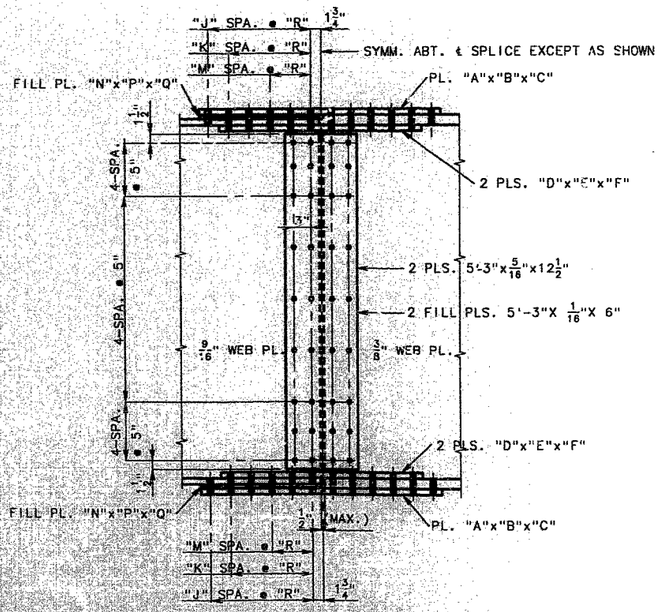

DETAIL OF BOLTED FIELD SPLICE

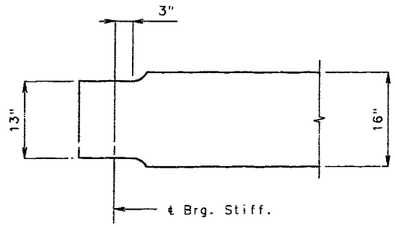

PART PLAN OF BOTTOM FLANGE
NEAR END BENTS

SPLICE LOCATION	TABLE OF DIMENSIONS—FIELD SPLICE													
	"A"	"B"	"C"	"D"	"E"	"F"	"G"	"J"	"K"	"M"	"N"	"P"	"Q"	"R"
S1 & S2 (TOP)	10"	3/8"	18 1/2"	4"	1/2"	18 1/2"	2"	2	2		10"	3/8"	9"	3"
S1 BOTT.	16"	3/4"	2'-3 1/2"	7"	3/4"	2'-3 1/2"	2"	3	3	2				3 1/2"
S2 BOTT.	14"	5/8"	20 1/2"	6"	3/4"	20 1/2"	1 1/2"	2	2	1	14"	1/8"	10"	3 1/2"

NOTE: USE 7/8" Ø HIGH STRENGTH BOLTS WITH 15/16" REAMED HOLES.
CONTACT SURFACES ARE TO BE BLAST CLEANED IN ACCORDANCE WITH SECTION 712.12.2.1 OF THE STANDARD SPECIFICATIONS.
USE ONE 5'3"X 1/16"X 6" FILL PLATE ON EACH SIDE OF 3/8" WEB.

SPL. PL., PG 3.42, A36.1, A
FIELD SPLICE REVISED:
MAR. 1992

DETAILED MAY 1994
CHECKED MAY 1994

NOTE: THIS DRAWING IS NOT TO SCALE. FOLLOW DIMENSIONS.

SHEET NO. 28A OF 51.

JACKSON COUNTY

A-610R1

STATE	PROJ. NO.	SHEET NO.
MO.		326

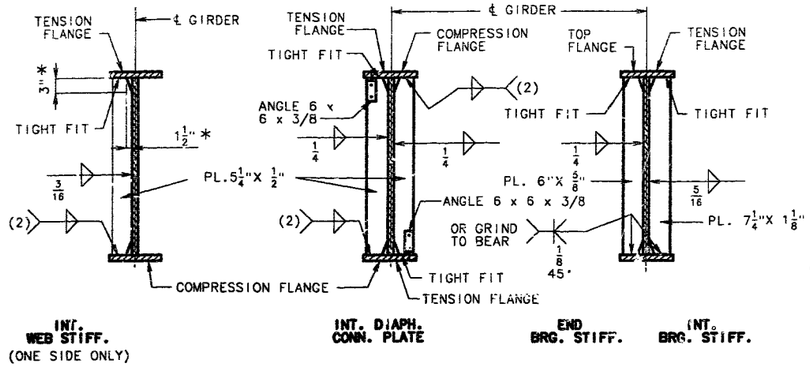

INT. WEB STIFF. (ONE SIDE ONLY) | INT. DIAPH. CONN. PLATE | END BRG. STIFF. | INT. BRG. STIFF.

(2) WELD TO COMPRESSION FLANGE AS LOCATED ON ELEVATION OF GIRDER.

* TYPICAL FOR ALL INT. WEB STIFF., INT. DIAPH. CONN. PL. AND BRG. STIFF..

WELDING DETAILS

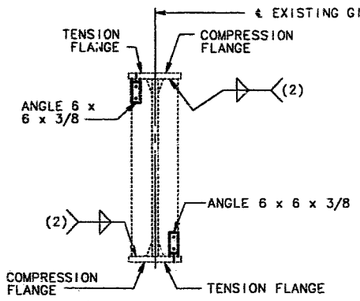

EXISTING INT. DIAPH. CONN. PLATE

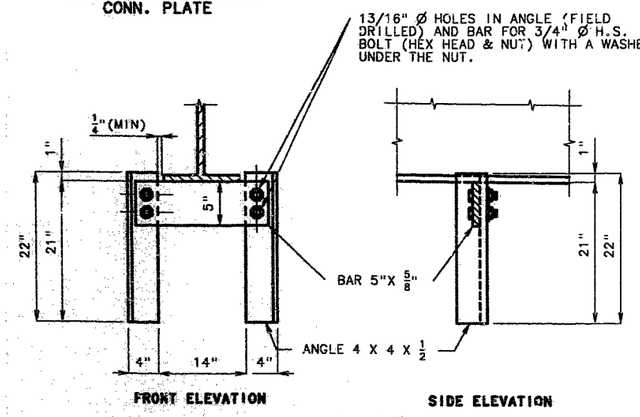

FRONT ELEVATION | SIDE ELEVATION

DETAILS OF SUPPORT CHAIR AT END BENT NO. 5

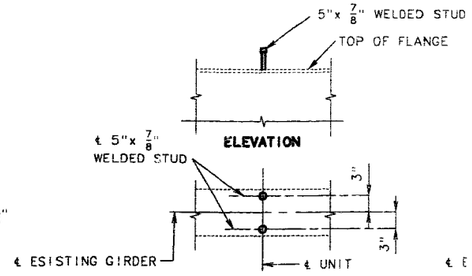

PLAN OF ADDITIONAL STUD CONN. FOR EXISTING GIRDERS (2 STUDS PER UNIT)

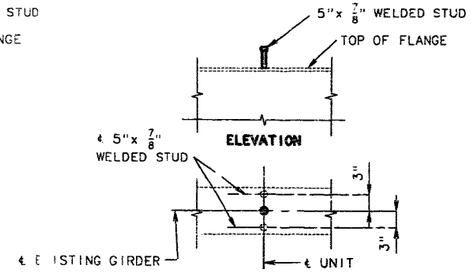

PLAN OF ADDITIONAL STUD CONN. FOR EXISTING GIRDERS (1 ADDITIONAL STUD PER UNIT)

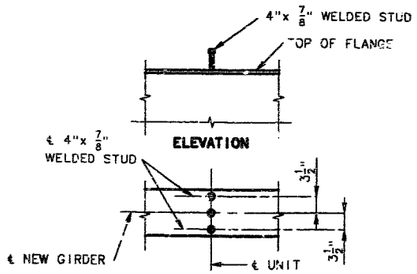

PLAN OF STUD CONN. FOR NEW GIRDERS (3 STUDS PER UNIT)

DETAILS OF SHEAR CONNECTORS

NOTE: WEIGHT OF 7868 LBS. OF SHEAR CONNECTORS IS INCLUDED IN WEIGHT OF FABRICATED STRUCTURAL CARBON STEEL (PL. GDR.) FOR NORTH AND SOUTH BOUND LANES.
SHEAR CONNECTORS SHALL MEET THE REQUIREMENTS OF STD. SPEC. 1037.

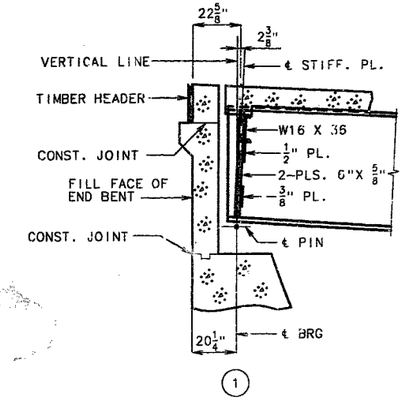

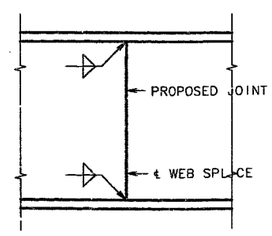

SHOP WEB SPLICE

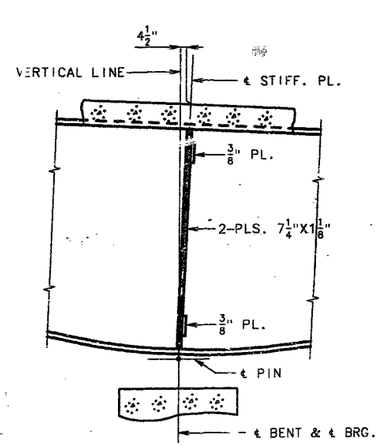

PART LONGITUDINAL SECTION

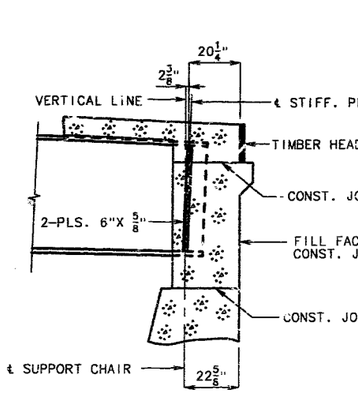

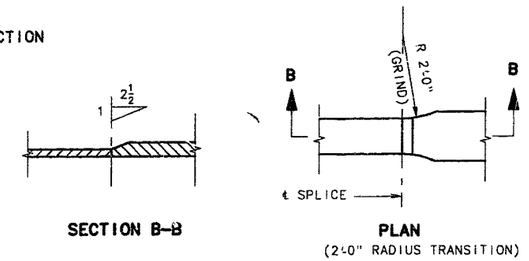

SECTION B-B | PLAN (2'-0" RADIUS TRANSITION)

WELDED SHOP FLANGE SPLICE

DETAILED SEPT. 1992
CHECKED JUNE 1993

NOTE: THIS DRAWING IS NOT TO SCALE. FOLLOW DIMENSIONS.

JACKSON COUNTY

A-610R1

351-315

STATE	PROJ. NO.	SHEET NO.
MO.		327

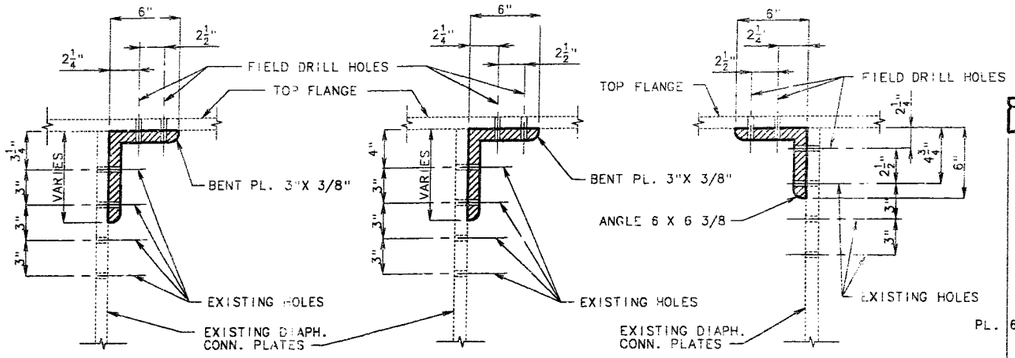

DETAIL "H" DETAIL "I" DETAIL "J"

DETAILS OF FLANGE CONNECTION ANGLE AND BENT PLATE TO EXISTING TOP FLANGE AND DIAPHRAGM CONNECTION PLATES

NOTE: FOR LOCATION OF DETAIL "H", DETAIL "I" AND DETAIL "J" SEE SHEETS NO. 25 AND NO. 26.

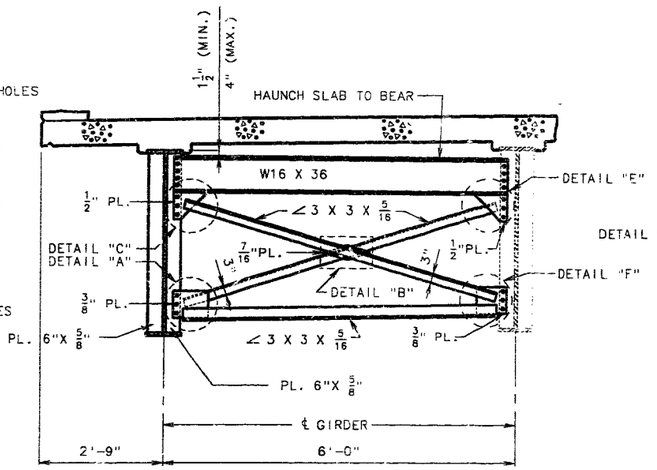

TYPICAL PART SECTION SHOWING END DIAPHRAGMS (E. B. L.) BENT NO. 1

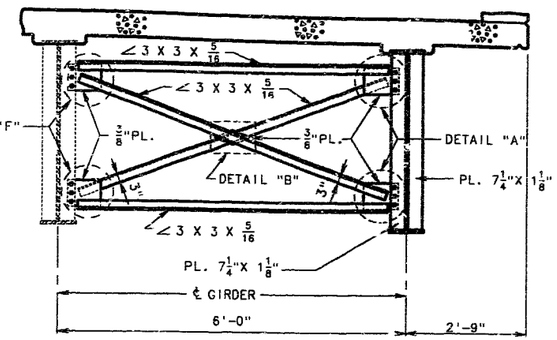

TYPICAL PART SECTION SHOWING CROSS FRAMES (E. B. L.)

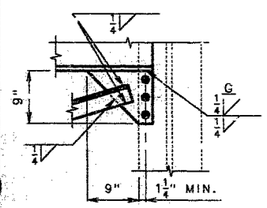

DETAIL "E"

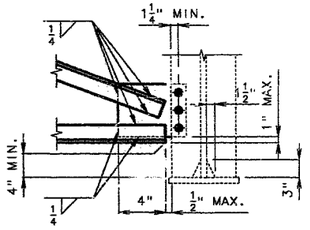

DETAIL "F"

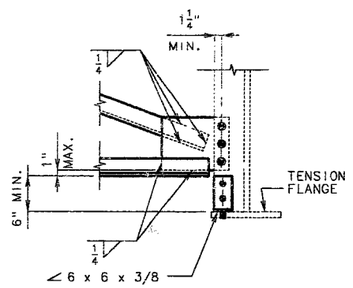

DETAIL "G"

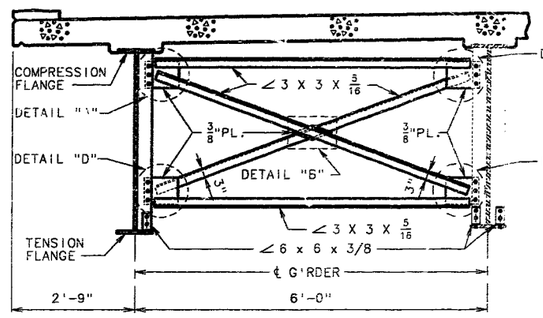

TYPICAL PART SECTION SHOWING INTERMEDIATE DIAPHRAGMS BOTTOM FLANGE IN TENSION (E. B. L.)

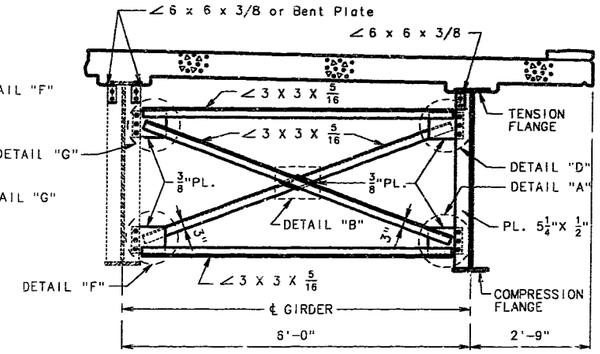

TYPICAL PART SECTION SHOWING INTERMEDIATE DIAPHRAGMS TOP FLANGE IN TENSION (E. B. L.)

NOTE: FIELD DRILL 13/16" Ø HOLES IN EXISTING BEARING STIFFENERS AND WEB STIFFENERS FOR DIAPHRAGM AND CROSS FRAME CONNECTIONS. FLANGE CONNECTION ANGLES SHALL BE ADDED TO ALL EXISTING INTERMEDIATE DIAPHRAGM CONNECTION PLATES FOR EXISTING INTERMEDIATE DIAPHRAGMS.

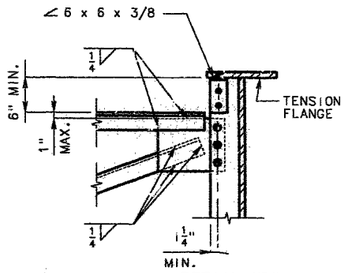

DETAIL "D"

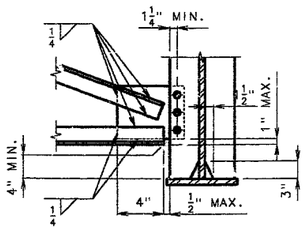

DETAIL "A"

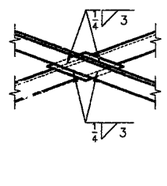

DETAIL "B"

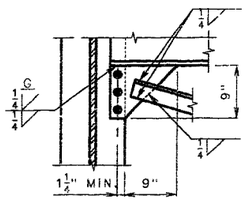

DETAIL "C"

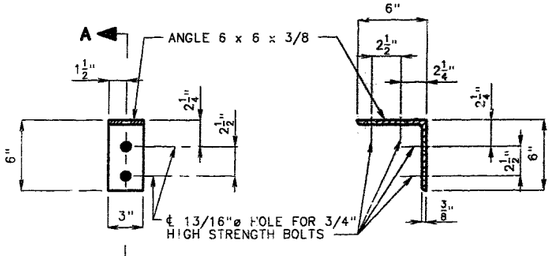

DETAIL OF FLANGE CONNECTION ANGLE

SECTION A-A

DIAPH>48;P/G3,42,STL. ,A		
DIAPH>48;P/G	REVISED	SEPT. 1992
APRIL 1991		

DETAILED SEPT. 1992
CHECKED MAY 1993

NOTE: THIS DRAWING IS NOT TO SCALE. FOLLOW DIMENSIONS.

JACKSON COUNTY A-610R1

STATE	PROJ. NO.	SHEET NO.
MO.		328

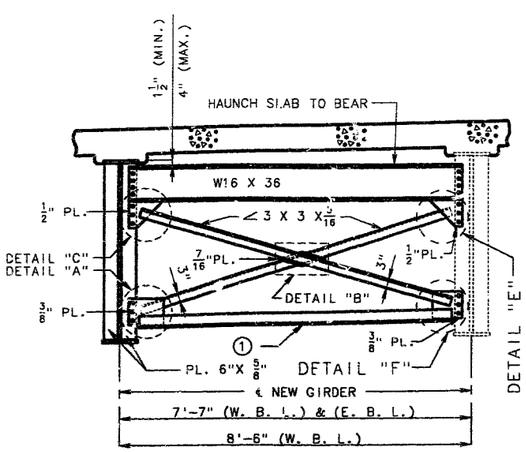

TYPICAL PART SECTION SHOWING
END DIAPHRAGMS BENT NO. 1

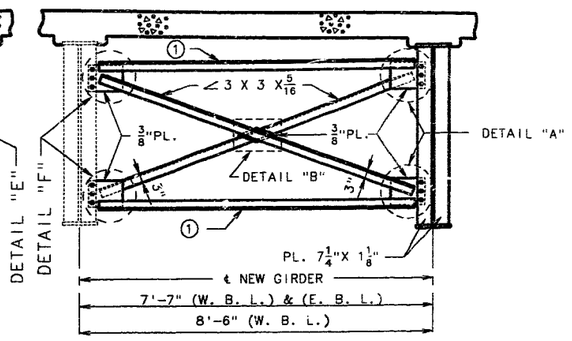

TYPICAL PART SECTION SHOWING
CROSS FRAMES

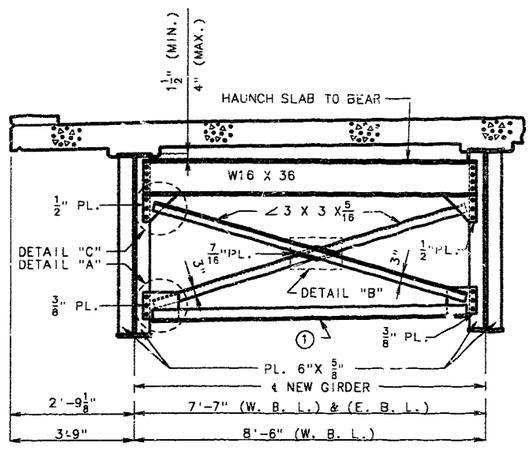

TYPICAL PART SECTION SHOWING
END DIAPHRAGMS END BENT NO 1

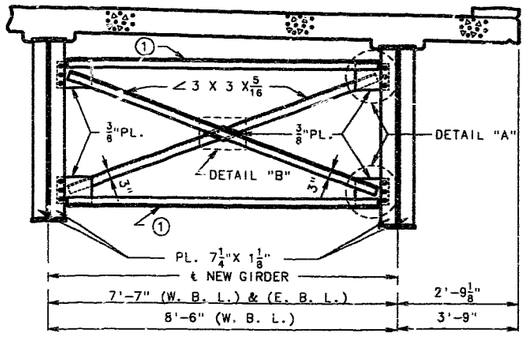

TYPICAL PART SECTION SHOWING
CROSS FRAMES

① ∠ 3½ X 3 X 5/16 FOR 7'-7" GDR. SPA.
∠ 3½"X 3½"X 5/16" FOR 8'-6" GDR. SPA.

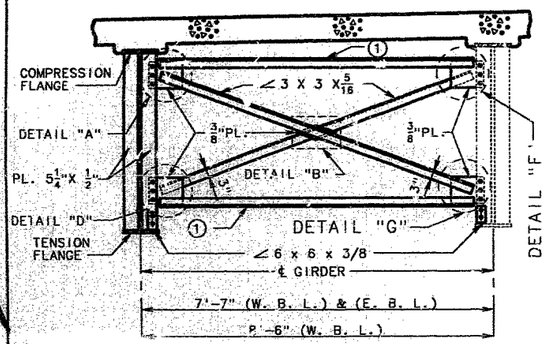

TYPICAL PART SECTION SHOWING
INTERMEDIATE DIAPHRAGMS
BOTTOM FLANGE IN TENSION

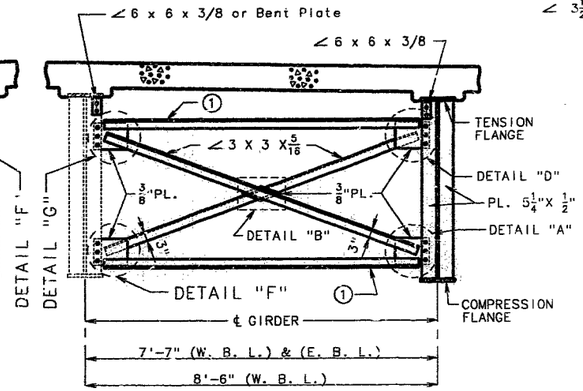

TYPICAL PART SECTION SHOWING
INTERMEDIATE DIAPHRAGMS
TOP FLANGE IN TENSION

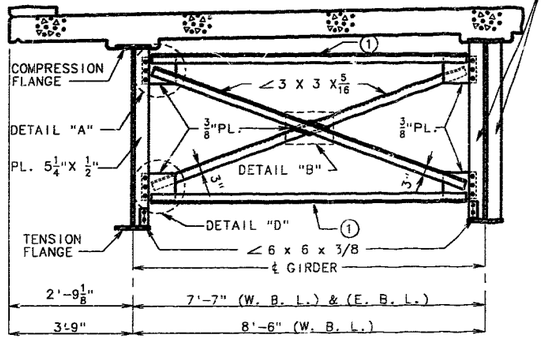

TYPICAL PART SECTION SHOWING
INTERMEDIATE DIAPHRAGMS
BOTTOM FLANGE IN TENSION

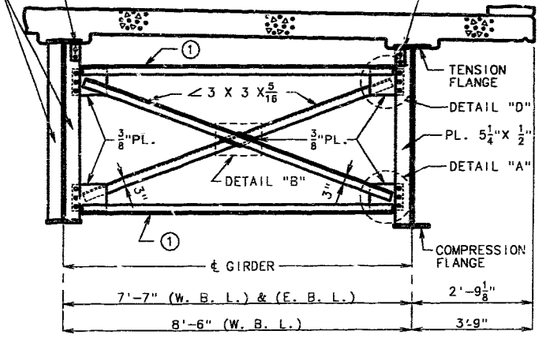

TYPICAL PART SECTION SHOWING
INTERMEDIATE DIAPHRAGMS
TOP FLANGE IN TENSION

NOTE: FIELD DRILL 13/16" Ø HOLES IN EXISTING BEARING STIFFENERS AND WEB STIFFENERS FOR DIAPHRAGM AND CROSS FRAME CONNECTIONS.

NOTE: FLANGE CONNECTION ANGLES SHALL BE ADDED TO ALL EXISTING INTERMEDIATE DIAPHRAGM CONNECTION PLATES FOR EXISTING INTERMEDIATE DIAPHRAGMS.
FOR DETAIL OF FLANGE CONNECTION ANGLE SEE SHEET NO. 30.

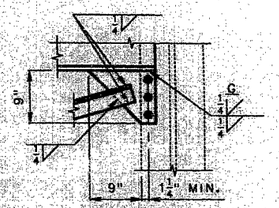

DETAIL "E"

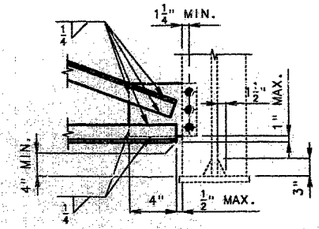

DETAIL "F"

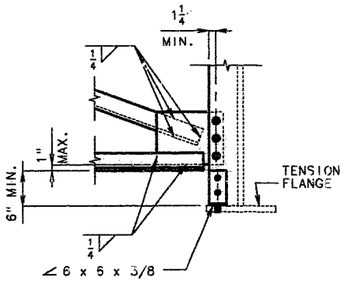

DETAIL "G"

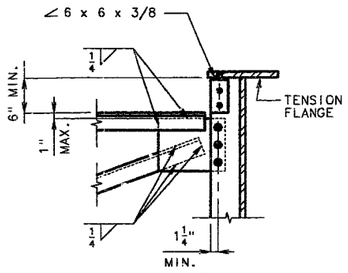

DETAIL "D"

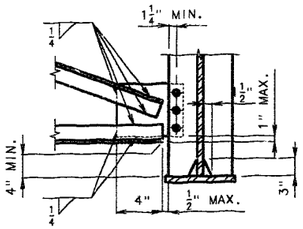

DETAIL "A"

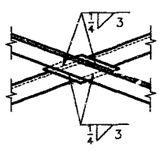

DETAIL "B"

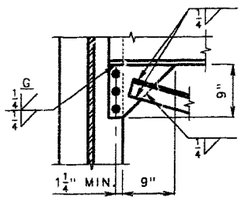

DETAIL "C"

DIAPH>48, P/G3, 42, STL., A		
DIAPH>48, P/G	REVISED	SEPT., 1992
APRIL, 1991		

DETAILED SEPT., 1992
CHECKED MAY 1993

NOTE: THIS DRAWING IS NOT TO SCALE. FOLLOW DIMENSIONS.

SHEET NO. 31 OF 51.

JACKSON COUNTY

A-610R1

STATE	PROJ. NO.	SHEET NO.
MO.		329

NOTES:

ANCHOR BOLTS FOR TYPE "D" BEARINGS SHALL BE $1\frac{1}{4}$" Ø A588 STEEL SWEDGED BOLTS AND SHALL EXTEND 12" INTO THE CONCRETE WITH A194-2, 2H OR A563-C, C3, D, DH, DH3 HEAVY HEXAGON NUTS.

ACTUAL MANUFACTURER'S CERTIFIED MILL TEST REPORTS (CHEMICAL AND MECHANICAL) SHALL BE PROVIDED.

USE F436 HARDENED WASHERS FOR THE FIXED BEARINGS AND NO HEAVY HEXAGON NUTS OR HARDENED WASHERS FOR THE EXPANSION BEARINGS. (SWEDGING SHALL BE 1" LESS THAN EXTENSION INTO THE CONCRETE.)

ANCHOR BOLTS, HARDENED WASHERS AND HEAVY HEXAGON NUTS SHALL BE PAINTED WITH 2 COATS (5 MILS MINIMUM) OF INORGANIC ZINC. WELD AREAS TO BE TOUCHED UP AFTER ASSEMBLY.

WEIGHT OF THE ANCHOR BOLTS, HARDENED WASHERS AND HEAVY HEXAGON NUTS FOR BEARINGS SHALL BE INCLUDED IN THE WEIGHT OF THE FABRICATED STRUCTURAL STEEL.

INDICATES MACHINE FINISH SURFACE.

SHOP DRAWINGS ARE NOT REQUIRED FOR THE LEAD PLATES AND/OR THE PREFORMED FABRIC PADS.

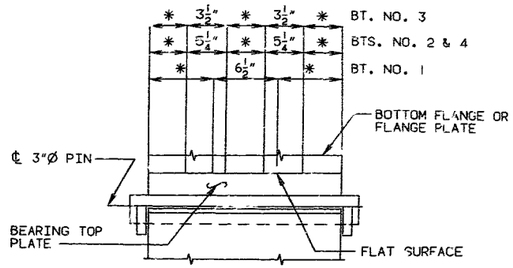

WELDING DETAILS

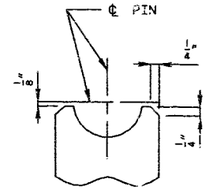

END VIEW OF WEB

* = 5/16

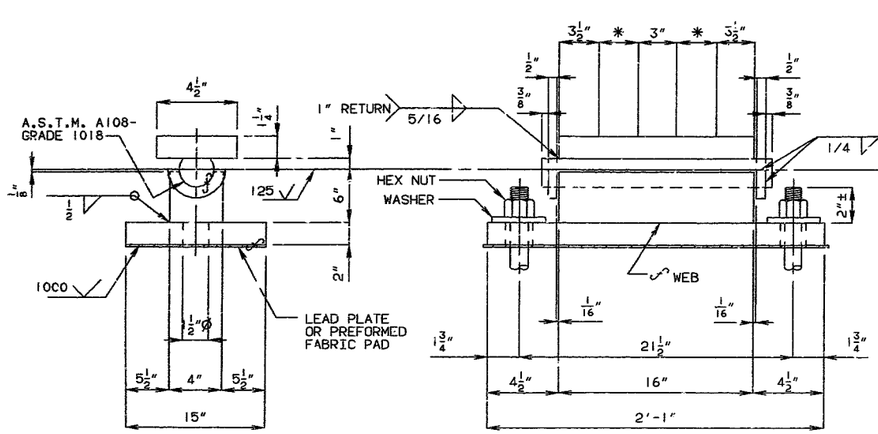

FIXED

REQUIRED: 3 FOR BENT NO. 3 (EAST BOUND LANE)
4 FOR BENT NO. 3 (WEST BOUND LANE)

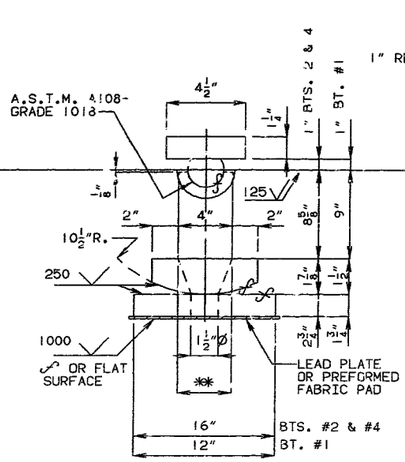

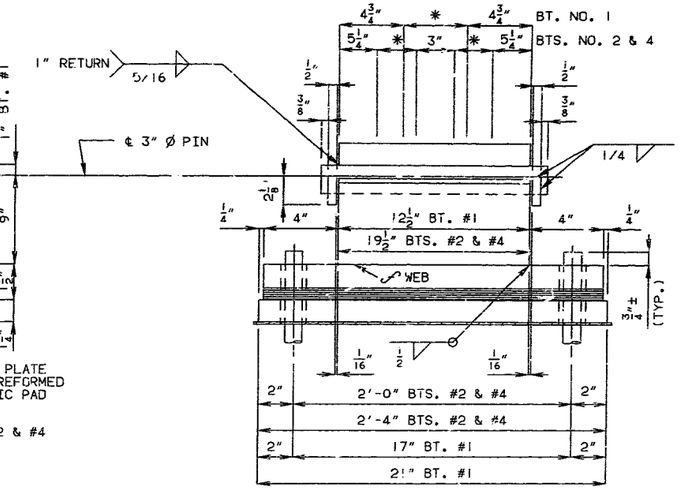

EXPANSION

REQUIRED: 3 FOR BENT NO. 1 (EAST BOUND LANE)
4 FOR BENT NO. 1 (WEST BOUND LANE)
3 FOR BENT NO. 2 (EAST BOUND LANE)
4 FOR BENT NO. 2 (WEST BOUND LANE)
3 FOR BENT NO. 4 (EAST BOUND LANE)
4 FOR BENT NO. 4 (WEST BOUND LANE)

TYPE 'D' BEARINGS

(ESTIMATED WEIGHT 14,440)

** $1\frac{1}{2}$"X 3" SLOT, GDRS. NO. 1A, 7 & 8 (EAST BOUND LANE)
$1\frac{3}{4}$"X 3" SLOT, GDRS. NO. 1A, 2A, 7 & 8WEST BOUND LANE)

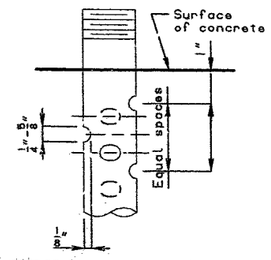

SWEDGE ANCHOR BOLT DETAILS

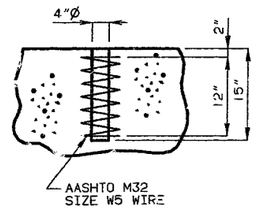

DETAIL OF ANCHOR BOLT WELLS

BRG 'D' .BRGS.31.STL.	REVISED	FEB. 1989
STD. D. BRG.		
FEB. 1965		

DETAILED OCT. 1992
CHECKED MAY 1993

NOTE: THIS DRAWING IS NOT TO SCALE. FOLLOW DIMENSIONS.

JACKSON COUNTY

A-610R1

STATE	PROJ. NO.	SHEET NO.
MO.		330

GENERAL NOTES:

THE EXPANSION DEVICE SHALL BE FABRICATED AND INSTALLED IN ACCORDANCE WITH THE RECOMMENDATIONS OF THE MANUFACTURER AND AS SET FORTH IN THE SPECIAL PROVISIONS.

THE CONTRACTOR MUST VERIFY ALL DIMENSIONS PRIOR TO FABRICATION.

ALL WELDS SHALL CONFORM TO SECTION 712 OF THE STANDARD SPECIFICATIONS.

SPLICES OF STEEL EXTRUSION SHALL DEVELOP FULL STRENGTH.

ALL STEEL SHALL BE A-36, EXCEPT STEEL EXTRUSIONS SHALL BE A.S.T.M. A-588 OR A-36.

NEOPRENE EXTRUSION SHALL MEET A.S.T.M. D-2628-69 MODIFIED (RECOVERY TEST EXCLUDED).

ANCHORS FOR EXTRUSIONS OR ARMOR SHALL BE APPROVED WELDED STUDS (C1010 THRU C1020).

PAYMENT FOR STEEL EXTRUSIONS AND NEOPRENE EXTRUSIONS SHALL BE MADE UNDER CONTRACT UNIT PRICE FOR "STRIP SEAL EXPANSION DEVICE".

PAYMENT FOR FURNISHING, PAINTING, AND PLACING STRUCTURAL STEEL PLATES SHALL BE INCLUDED IN CONTRACT UNIT PRICE FOR "STRIP SEAL EXPANSION DEVICE.

GAP DIMENSION SHALL BE INCREASED 1/16" FOR EACH 10° FALL IN TEMPERATURE AND DECREASED 1/16" FOR EACH RISE IN TEMPERATURE.

A NEOPRENE EXTRUSION CAPABLE OF PROVIDING A TOTAL MOVEMENT OF 4" SHALL BE PROVIDED.

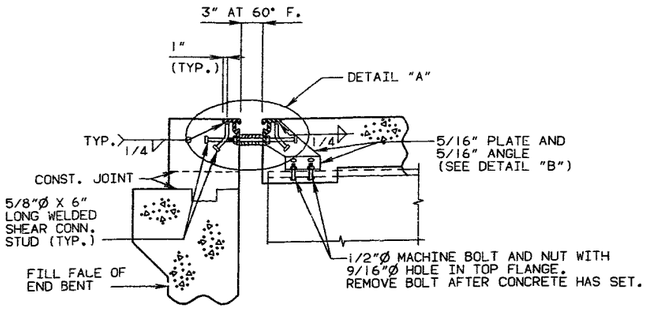

PART SECTION D-D

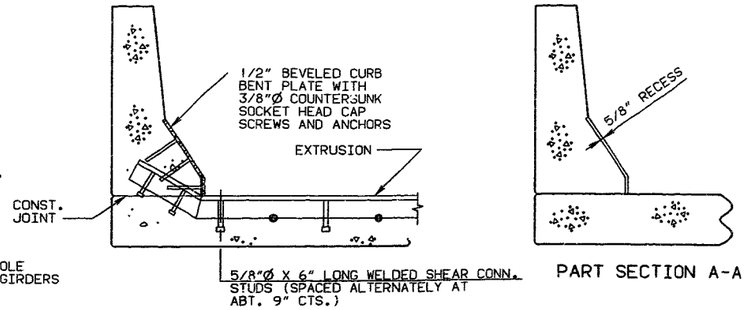

PART SECTION B-B

PART SECTION A-A

NOTE: FIELD DRILL 9/16"Ø HOLE IN TOP FLANGE OF EXISTING GIRDERS FOR 1/2" Ø MACHINE BOLTS.

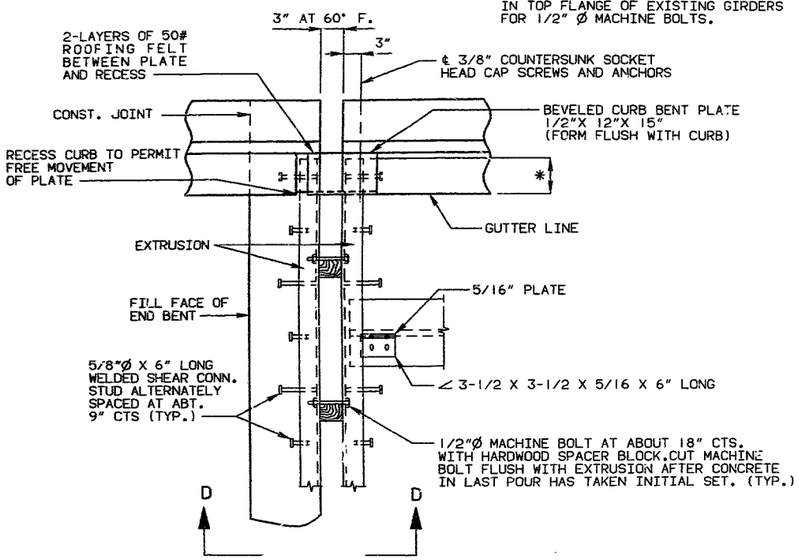

PART PLAN

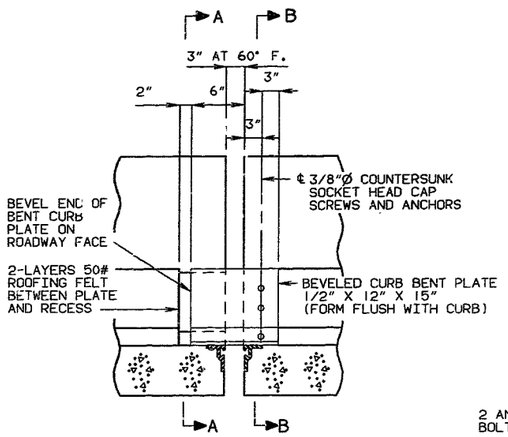

PART ELEVATION OF BARRIER CURB

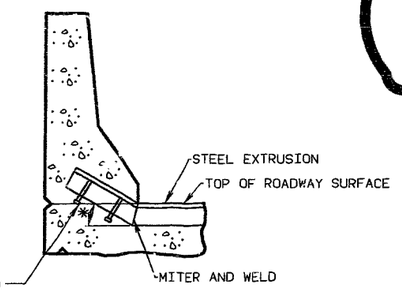

SECTION THRU SAFETY BARRIER CURB

* AS SUGGESTED BY MANUFACTURER

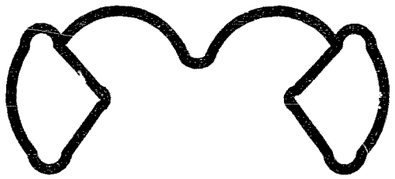

STRIP SEAL GLAND

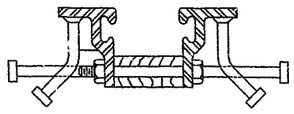

DETAIL "A"

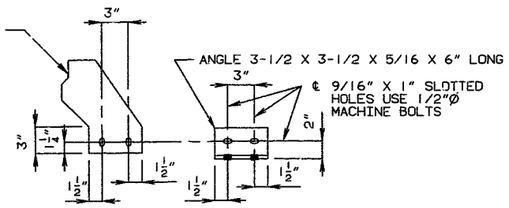

DETAIL "B"

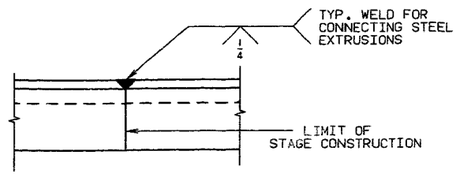

DETAIL SHOWING WELD FOR STAGE CONSTRUCTION

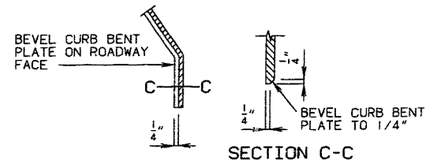

SECTION C-C

PART ELEVATION AT END OF BEVELED CURB BENT PLATE

PCJS SQ,ED 3.35,STL,E,A	REVISED	MAY 1987
PCJS-STL EB-SQ		
OCT. 1973		

DETAILS OF PREFORMED COMPRESSION JOINT SEAL AT BENT NO. 1.

DETAILED SEPT. 1992
CHECKED MAY 1993

NOTE: THIS DRAWING IS NOT TO SCALE. FOLLOW DIMENSIONS.

STATE	PROJ. NO.	SHEET NO.
MO.		

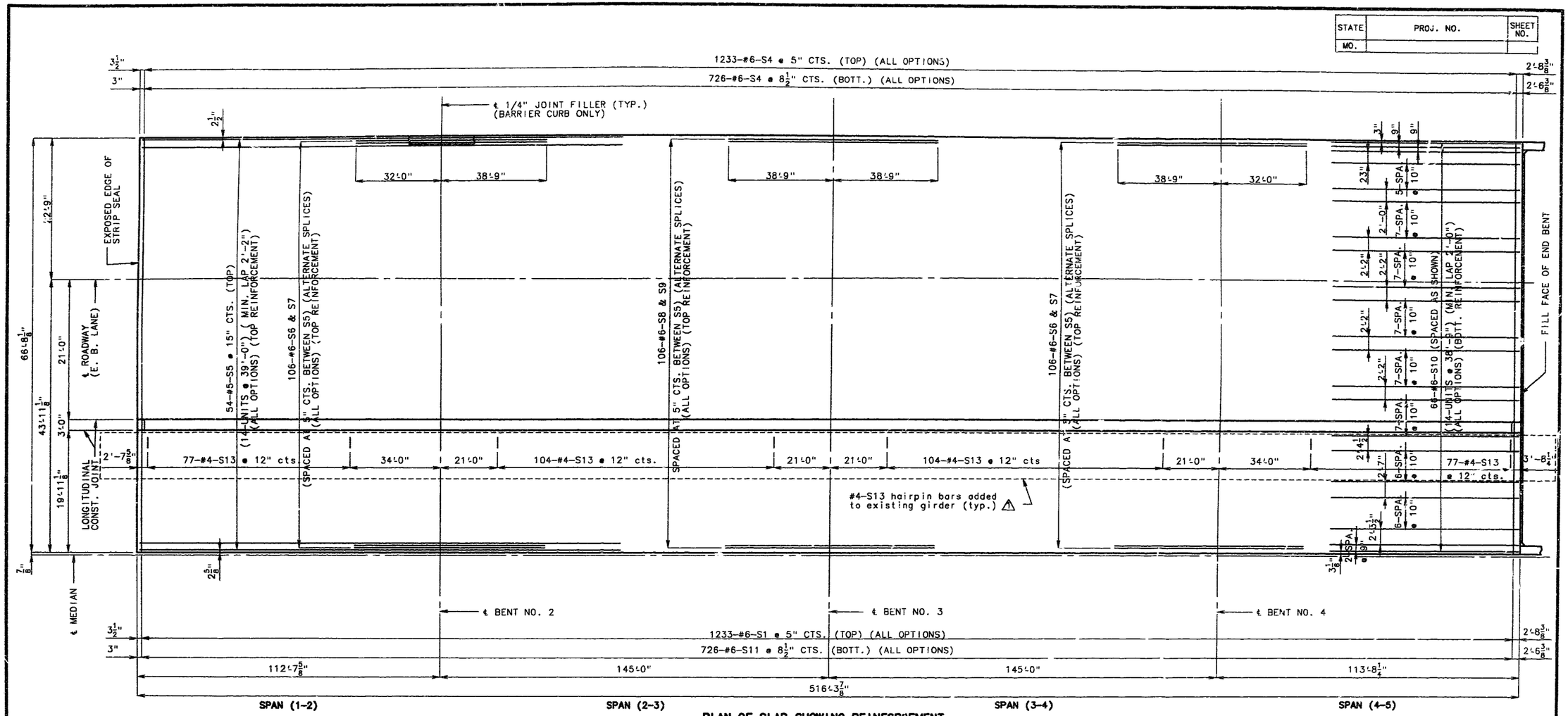

PLAN OF SLAB SHOWING REINFORCEMENT
(EAST BOUND LANE)

NOTE: LONGITUDINAL DIMENSIONS SHOWN ARE TAKEN ALONG TOP EDGE OF SLAB PARALLEL TO GRADE.
FOR DETAILS AND REINFORCEMENT OF SAFETY BARRIER CURB NOT SHOWN SEE SHEETS NO. 40, 41, 42, 43, 44 & 45.
FOR GIRDER CAMBER DIAGRAM AND THEORETICAL SLAB HAUNCHING DIAGRAM SEE SHEET NO. 37.
FOR SLAB POURING SEQUENCE SEE SHEET NO. 36.
FOR DETAILS OF SLAB DRAINS SEE SHEET NO. 39.
FOR PART SECTION THRU SLAB SHOWING S-I-P OPTION SEE SHEET NO. 36.

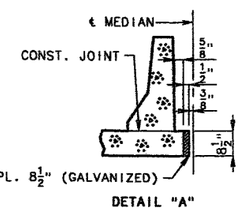

DETAIL "A"

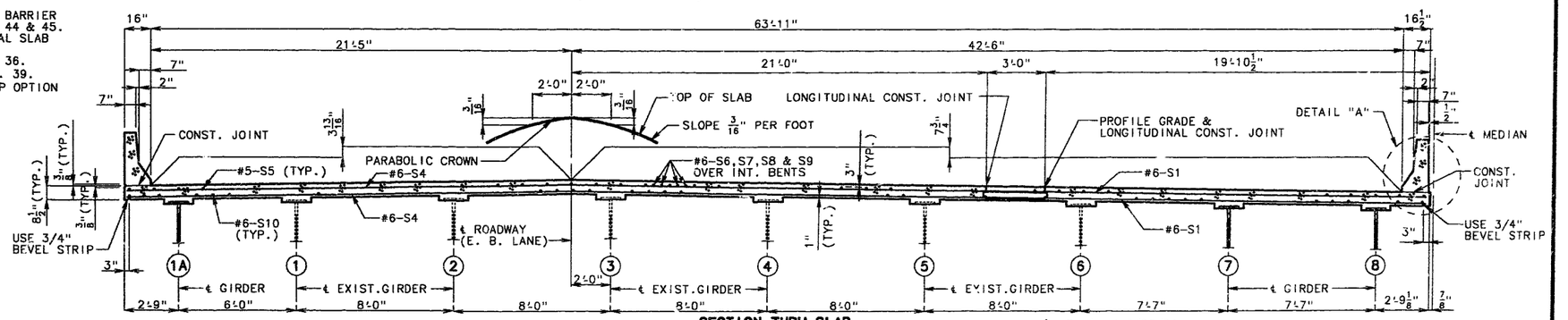

SECTION THRU SLAB
(C. I. P. OPTION)

NOTE: THIS DRAWING IS NOT TO SCALE. FOLLOW DIMENSIONS.

DETAILED SEPT. 1992
CHECKED MAY 1993

⚠ Revised 5/26/94

SHEET NO. 34 OF 51.

JACKSON COUNTY

J-610R1

330

REVISED:

STATE	PROJ. NO.	SHEET NO.
MO.		

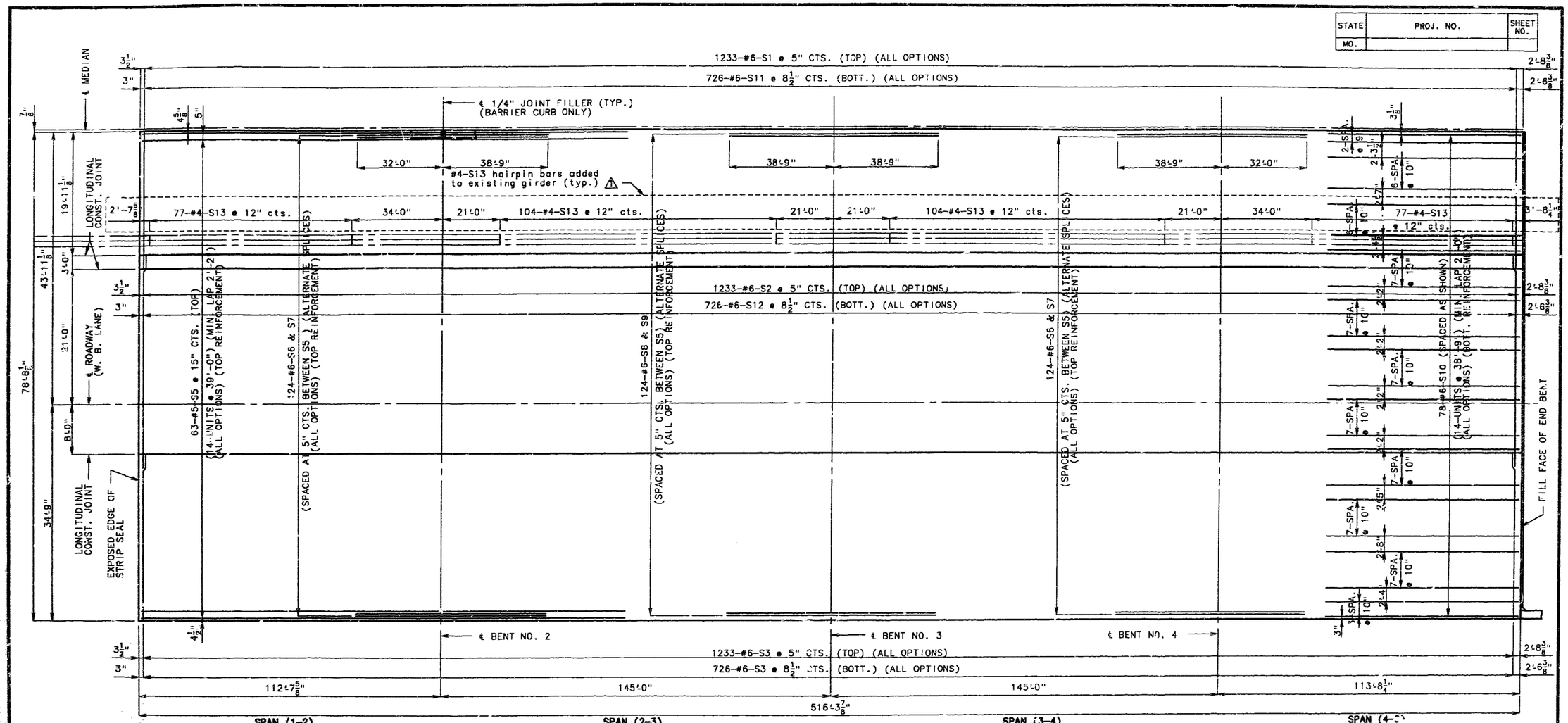

PLAN OF SLAB SHOWING REINFORCEMENT
(WEST BOUND LANE)

NOTE: FOR DETAILS AND REINFORCEMENT OF SAFETY BARRIER CURB NOT SHOWN, SEE SHEETS NO. 40,41,42,43,44 & 45.
FOR GIRDER CAMBER DIAGRAM AND THEORETICAL SLAB HAUNCHING DIAGRAM SEE SHEET NO. 38.
FOR SLAB POURING SEQUENCE SEE SHEET NO. 36.
FOR PART SECTION THRU SLAB SHOWING S-I-P OPTION SEE SHEET NO. 36.

NOTE: FOR DETAILS OF SLAB DRAINS SEE SHEET NO. 39.

NOTE: LONGITUDINAL DIMENSIONS SHOWN ARE TAKEN ALONG TOP EDGE OF SLAB PARALLEL TO GRADE.

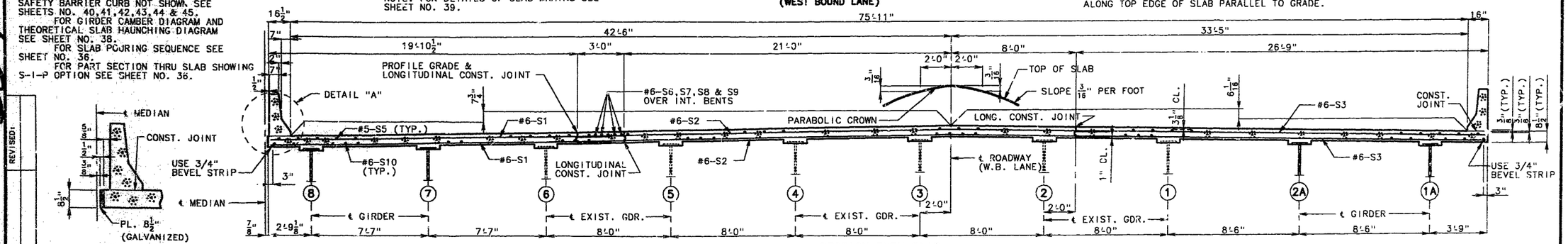

SECTION THRU SLAB
(C. I. P. OPTION)

REVISED:

DETAILED SEPT. 1992
CHECKED MAY 1993

NOTE: THIS DRAWING IS NOT TO SCALE. FOLLOW DIMENSIONS.

⚠1 Revised 5/26/94

SHEET NO. 35 OF 51.

JACKSON COUNTY A-610R1

STATE	PROJ. NO.	SHEET NO.
MO.		

Added ⚠

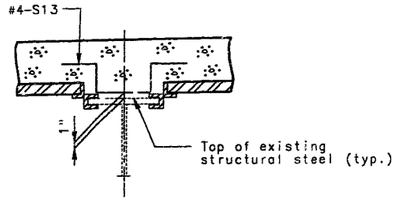

SECTION THRU HAUNCH

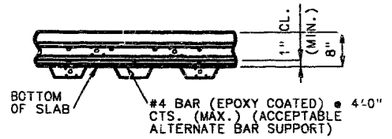

SECTION A-A

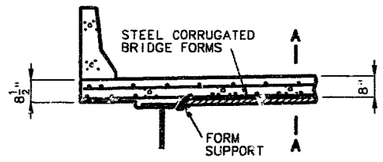

PART SECTION THRU SLAB
(S-I-P OPTION)

NOTE: S-I-P OPTION IS SAME AS C-I-P OPTION EXCEPT AS SHOWN.

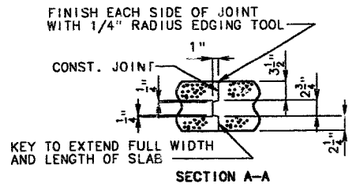

SECTION A-A

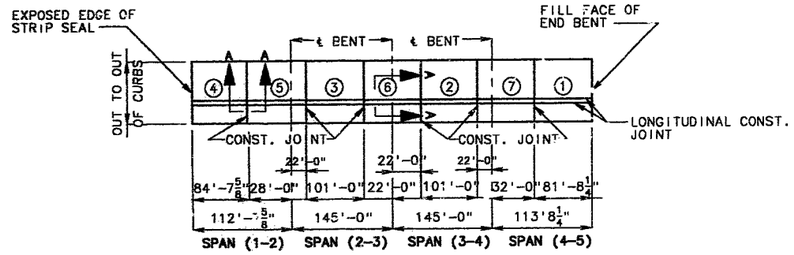

	SEQUENCE OF POURS							MIN. RATE OF POUR CU. YDS./HR.
	DIRECTION							WITH RETARDER
BASIC SEQUENCE	1	2	3	4	5	6	7	25
	EITHER DIRECTION							
ALTERNATE POURS TO THE BASIC SKIP SEQUENCE ARE SUBJECT TO THE APPROVAL OF THE ENGINEER IN ACCORDANCE WITH SECTION 703.3.12.4 OF MISSOURI STANDARD SPECIFICATIONS.								
ALTERNATE "A" POURS	1		7 + 2		6 + 3		5 + 4	54
	END TO 7		1 TO 6		2 TO 5		3 TO END	
ALTERNATE "B" POURS	1 + 7 + 2			6 + 3			5 + 4	54
	END TO 6			2 TO 5			3 TO END	
ALTERNATE "C" POURS	1 + 7 + 2				6 + 3 + 5 + 4			54
	END TO 6				2 TO END			
ALTERNATE "D" POURS	1 + 7 + 2 + 6 + 3 + 5 + 4							54
	END TO END							

SLAB POURING SEQUENCE
(EAST BOUND LANE)

NOTE: THE CONTRACTOR SHALL POUR AND SATISFACTORILY FINISH THE SLAB POURS AT THE RATE GIVEN. RETARDER, SHALL BE AN APPROVED TYPE AND RETARD THE SET OF CONCRETE TO 2.5 HOURS.

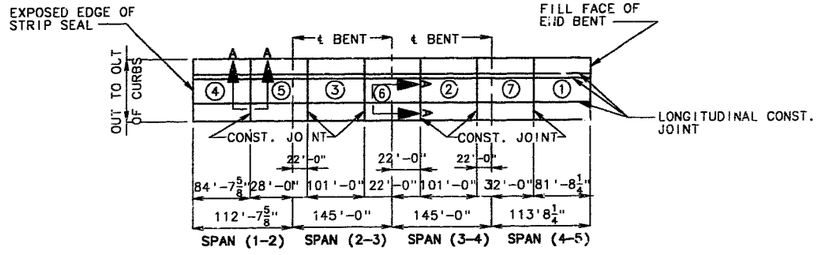

	SEQUENCE OF POURS							MIN. RATE OF POUR CU. YDS./HR.	
	DIRECTION							WITH RETARDER	NO RETARDER
BASIC SEQUENCE	1	2	3	4	5	6	7	25	25
	EITHER DIRECTION								
ALTERNATE POURS TO THE BASIC SKIP SEQUENCE ARE SUBJECT TO THE APPROVAL OF THE ENGINEER IN ACCORDANCE WITH SECTION 703.3.12.4 OF MISSOURI STANDARD SPECIFICATIONS.									
ALTERNATE "A" POURS	1		7 + 2		6 + 3		5 + 4	37	61
	END TO 7		1 TO 6		2 TO 5		3 TO END		
ALTERNATE "B" POURS	1 + 7 + 2			6 + 3			5 + 4	37	61
	END TO 6			2 TO 5			3 TO END		
ALTERNATE "C" POURS	1 + 7 + 2				6 + 3 + 5 + 4			37	61
	END TO 6				2 TO END				
ALTERNATE "D" POURS	1 + 7 + 2 + 6 + 3 + 5 + 4							37	61
	END TO END								

SLAB POURING SEQUENCE
(WEST BOUND LANE)

NOTE: THE CONTRACTOR SHALL POUR AND SATISFACTORILY FINISH THE SLAB POURS AT THE RATE GIVEN. RETARDER, IF USED SHALL BE AN APPROVED TYPE AND RETARD THE SET OF CONCRETE TO 2.5 HOURS.

⚠ Revised 5/26/94

REVISED:

DETAILED SEPT. 1992
CHECKED JUNE 1993

NOTE: THIS DRAWING IS NOT TO SCALE. FOLLOW DIMENSIONS.

STATE	PROJ. NO.	SHEET NO.
MO.		

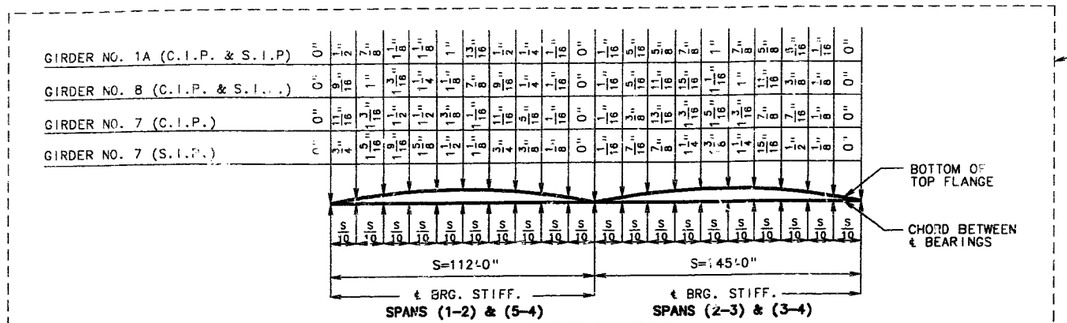

CAMBER DIAGRAM
(EAST BOUND LANE)

NOTE: CAMBER INCLUDES ALLOWANCE FOR DEAD LOAD DEFLECTION DUE TO CONCRETE SLAB, CURB AND STRUCTURAL STEEL.
15% OF DEAD LOAD DEFLECTION IS DUE TO THE WEIGHT OF STRUCTURAL STEEL.

See sheet no. 37A for camber diagram (east bound lane) ⚠

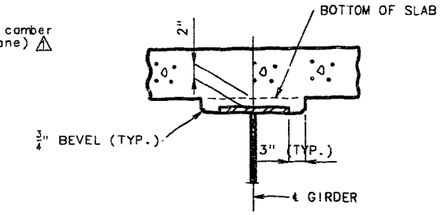

THEORETICAL SLAB HAUNCH
GIRDERS NO. 1A, 7 & 8 (C.I.P & S.I.P.)
(EAST BOUND LANE)

NOTE: 2" DIMENSION MAY VARY IF GIRDER CAMBER AFTER ERECTION DIFFERS FROM PLAN CAMBER BY MORE THAN THE ¾ OF D. L. DEFLECTION DUE TO WEIGHT OF STRUCTURAL STEEL. NO PAYMENT WILL BE MADE FOR ADDITIONAL FORMING OR CONCRETE REQUIRED FOR VARIATION IN HAUNCHING.

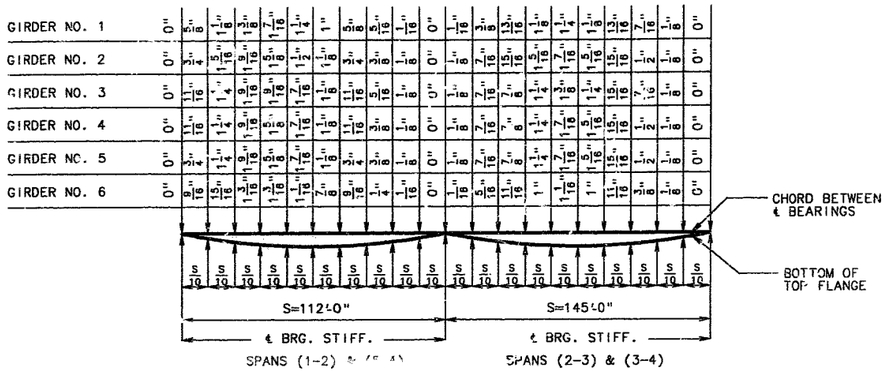

DEAD LOAD DEFLECTIONS (C.I.P.)
(EAST BOUND LANE)

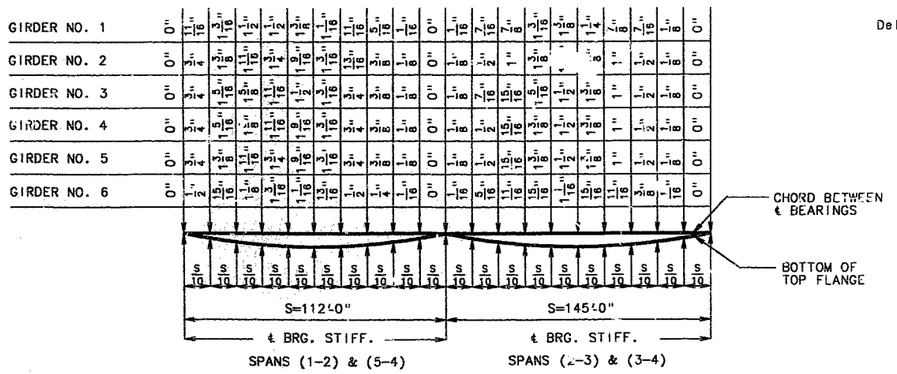

DEAD LOAD DEFLECTIONS (S.I.P.)
(EAST BOUND LANE)

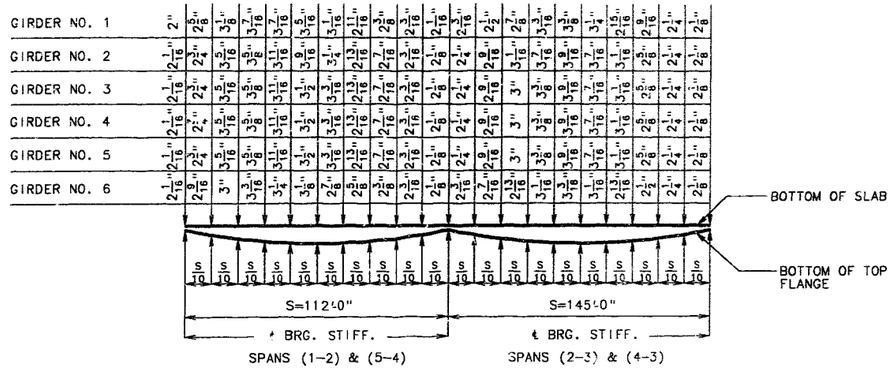

THEORETICAL SLAB HAUNCHING DIAGRAM (C.I.P.)
(EAST BOUND LANE)

Delete ⚠

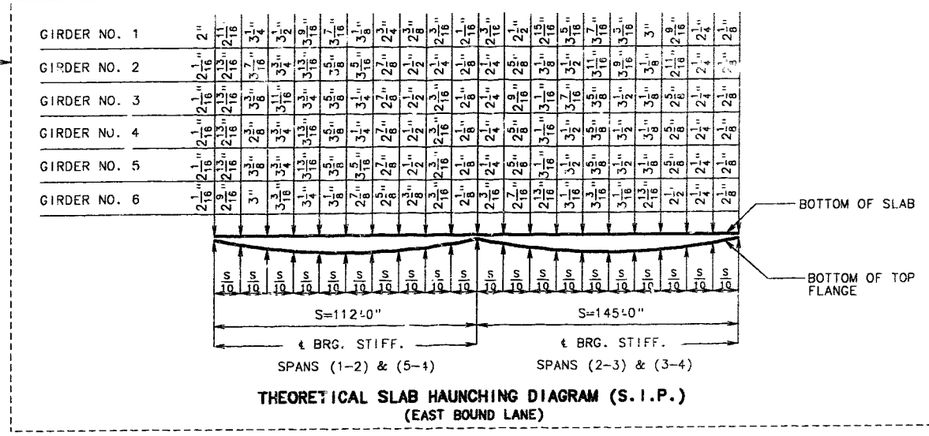

THEORETICAL SLAB HAUNCHING DIAGRAM (S.I.P.)
(EAST BOUND LANE)

TO DETERMINE THE HAUNCH FOR THE STAY-IN-PLACE ALTERNATE, ADD 1/2" TO THE HAUNCH FOR THE CAST-IN-PLACE ALTERNATE.

323

REVISED:

⚠ Revised 5/19/94
⚠ Revised 5/26/94

DETAILED SEPT. 1992
CHECKED MAY 1993

NOTE: THIS DRAWING IS NOT TO SCALE. FOLLOW DIMENSIONS.

JACKSON COUNTY

A-610R1

STATE	PROJ. NO.	SHEET NO.
MO.		

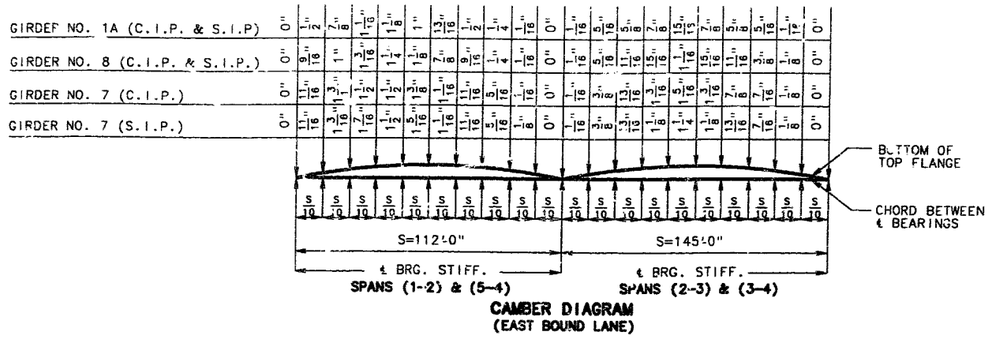

CAMBER DIAGRAM
(EAST BOUND LANE)

NOTE: CAMBER INCLUDES ALLOWANCE FOR DEAD LOAD DEFLECTION DUE TO CONCRETE SLAB, CURB AND STRUCTURAL STEEL.
15% OF DEAD LOAD DEFLECTION IS DUE TO THE WEIGHT OF STRUCTURAL STEEL.

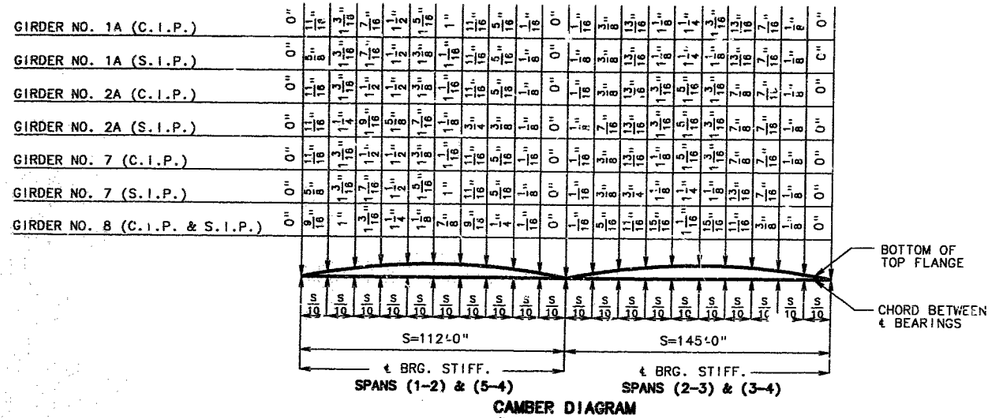

CAMBER DIAGRAM
(WEST BOUND LANE)

NOTE: CAMBER INCLUDES ALLOWANCE FOR DEAD LOAD DEFLECTION DUE TO CONCRETE SLAB, CURB AND STRUCTURAL STEEL.
13% OF DEAD LOAD DEFLECTION IS DUE TO THE WEIGHT OF STRUCTURAL STEEL.

339

REVISED

DETAILED MAY 1994
CHECKED MAY 1994

NOTE: THIS DRAWING IS NOT TO SCALE. FOLLOW DIMENSIONS.

STATE	PROJ. NO.	SHEET NO.
MO.		

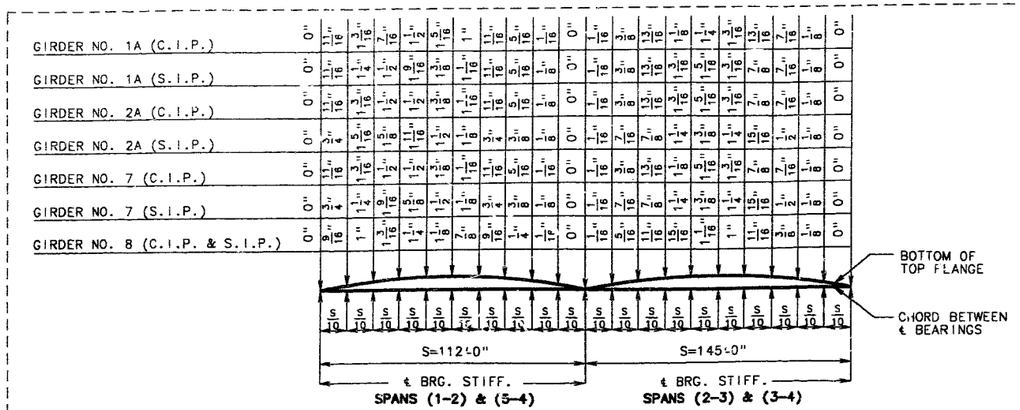

CAMBER DIAGRAM
(WEST BOUND LANE)

See sheet no. 37A for camber diagram (east bound lane) ⚠

NOTE: CAMBER INCLUDES ALLOWANCE FOR DEAD LOAD DEFLECTION DUE TO CONCRETE SLAB, CURB AND STRUCTURAL STEEL.
13% OF DEAD LOAD DEFLECTION IS DUE TO THE WEIGHT OF STRUCTURAL STEEL.

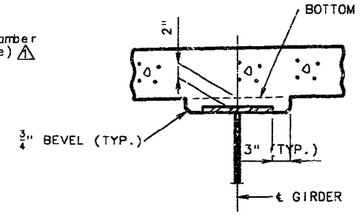

THEORETICAL SLAB HAUNCH
GIRDERS NO. 1A, 2A, 7 & 8 (C.I.P. & S.I.P.)
(WEST BOUND LANE)

NOTE: 2" DIMENSION MAY VARY IF GIRDER CAMBER AFTER ERECTION DIFFERS FROM PLAN CAMBER BY MORE THAN THE ⅓ OF D. L. DEFLECTION DUE TO WEIGHT OF STRUCTURAL STEEL. NO PAYMENT WILL BE MADE FOR ADDITIONAL FORMING OR CONCRETE REQUIRED FOR VARIATION IN HAUNCHING.

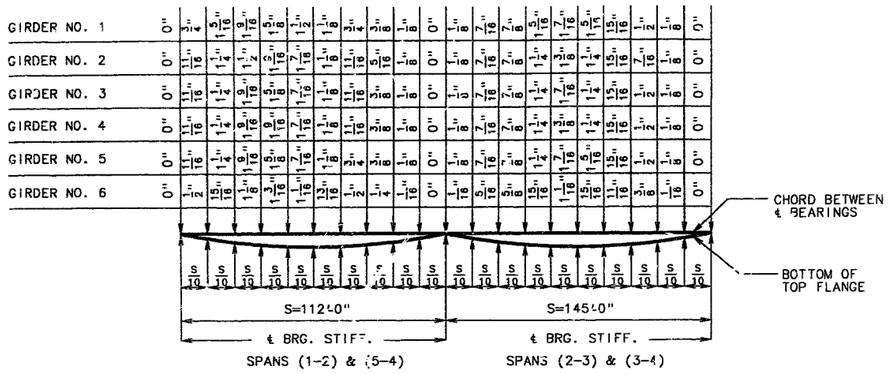

DEAD LOAD DEFLECTIONS (C.I.P.)
(WEST BOUND LANE)

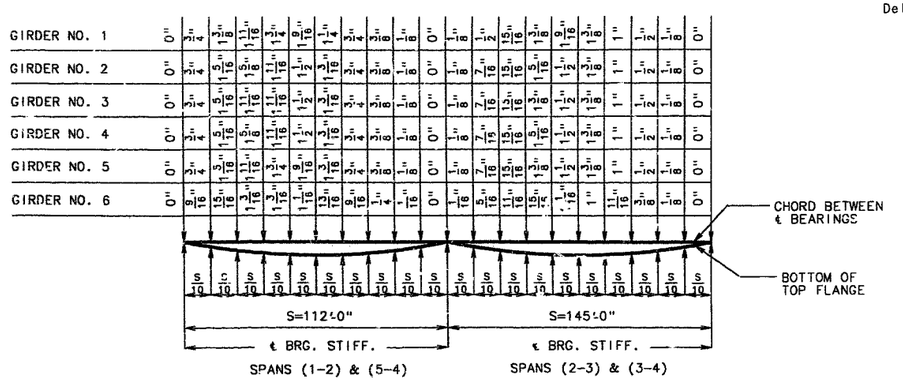

DEAD LOAD DEFLECTIONS (S.I.P.)
(WEST BOUND LANE)

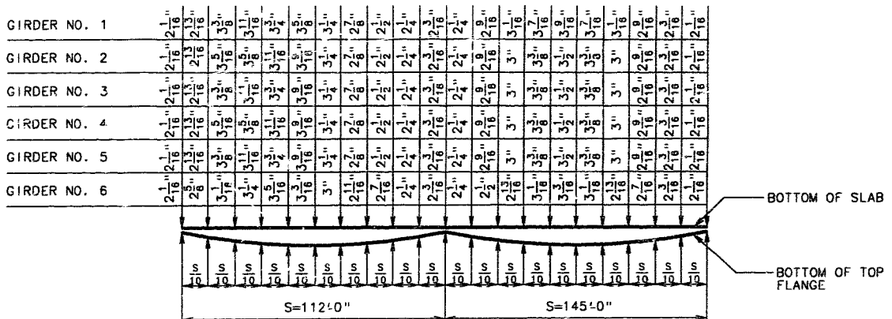

THEORETICAL SLAB HAUNCHING DIAGRAM (C.I.P.)
(WEST BOUND LANE)

Delete ⚠

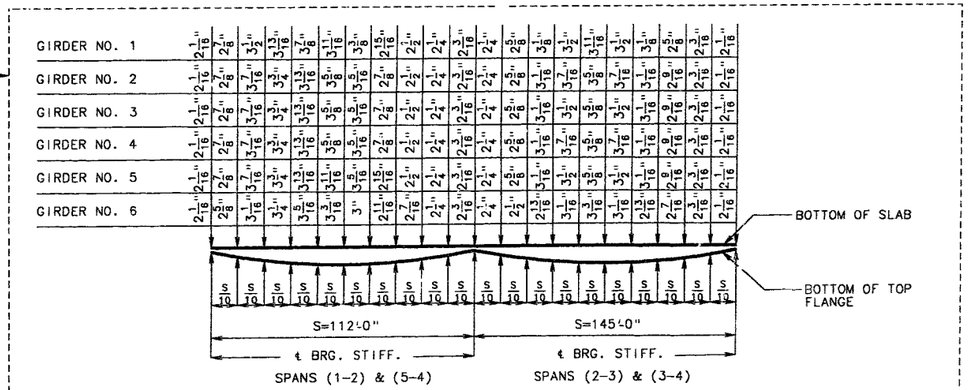

THEORETICAL SLAB HAUNCHING DIAGRAM (S.I.P.)
(WEST BOUND LANE)

TO DETERMINE THE HAUNCH FOR THE STAY-IN-PLACE ALTERNATE, ADD 1/2" TO THE HAUNCH FOR THE CAST-IN-PLACE ALTERNATE.

3025

REVISED:

⚠ Revised 5/19/94
⚠ Revised 5/26/94

DETAILED SEPT. 1992
CHECKED MAY 1993

NOTE: THIS DRAWING IS NOT TO SCALE. FOLLOW DIMENSIONS.

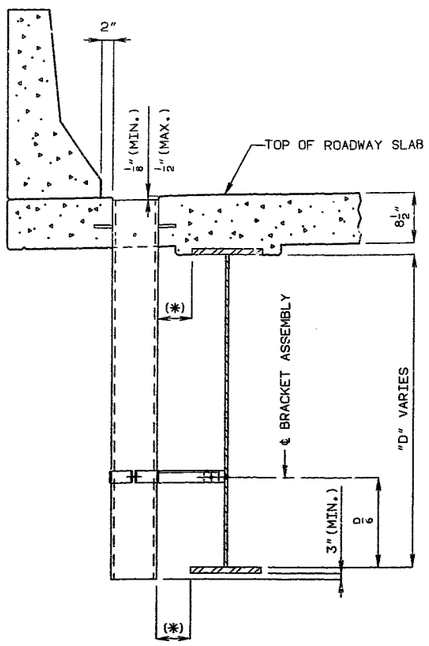

PART ELEVATION OF SLAB AT DRAIN

(*) IF DIMENSION IS LESS THAN 1", DRAINS SHALL BE PLACED PARALLEL TO ROADWAY, OTHERWISE PLACE DRAINS TRANSVERSE TO ROADWAY.

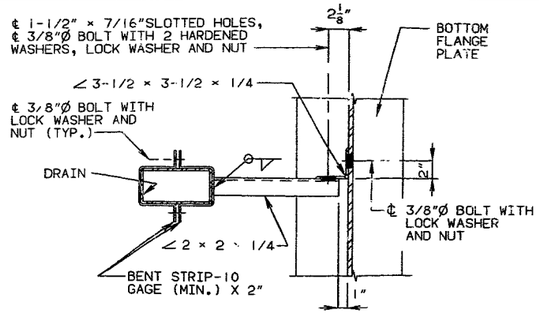

PART PLAN SHOWING BRACKET ASSEMBLY

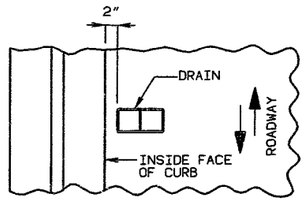

PART PLAN OF SLAB AT DRAIN

DETAILS OF DRAINS TRANSVERSE TO ROADWAY

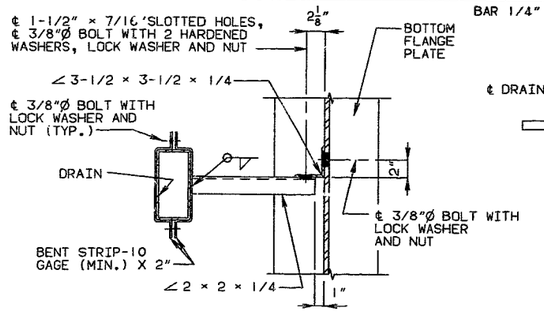

PART PLAN SHOWING BRACKET ASSEMBLY

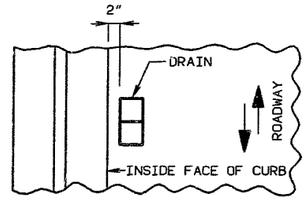

PART PLAN OF SLAB AT DRAIN

DETAILS OF DRAINS PARALLEL TO ROADWAY

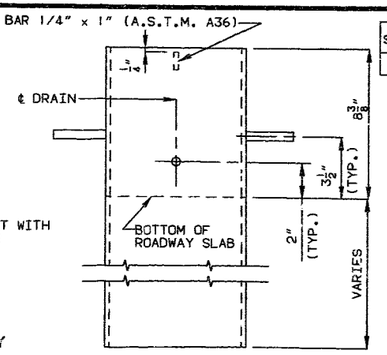

ELEVATION OF DRAIN

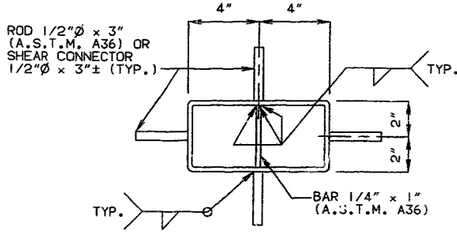

PLAN OF DRAIN

STATE	PROJ. NO.	SHEET NO.
MO.		336

GENERAL NOTES:

SLAB DRAINS MAY BE FABRICATED OF EITHER 1/4" WELDED SHEETS OF A.S.T.M. A36 STEEL OR FROM 1/4" STRUCTURAL STEEL TUBING A.S.T.M. A500 OR A501.

OUTSIDE DIMENSIONS OF DRAINS ARE 8" × 4".

LOCATE DRAINS IN THE SLAB BY DIMENSIONS SHOWN IN THE PART ELEVATION.

SHIFT REINFORCING IN FIELD WHERE NECESSARY TO CLEAR DRAINS.

THE DRAINS AND BRACKET ASSEMBLY SHALL BE GALVANIZED IN ACCORDANCE WITH A.S.T.M. A123.

ALL BOLTS, HARDENED WASHERS, LOCK WASHERS AND NUTS SHALL BE GALVANIZED IN ACCORDANCE WITH A.S.T.M. A153.

THE BOLT HOLE FOR THE BRACKET ASSEMBLY ATTACHMENT SHALL BE LOCATED ON THE PLATE GIRDER SHOP DRAWINGS.

SHOP DRAWINGS WILL NOT BE REQUIRED FOR SLAB DRAINS AND THE BRACKET ASSEMBLY.

SLAB DRAIN DETAILS

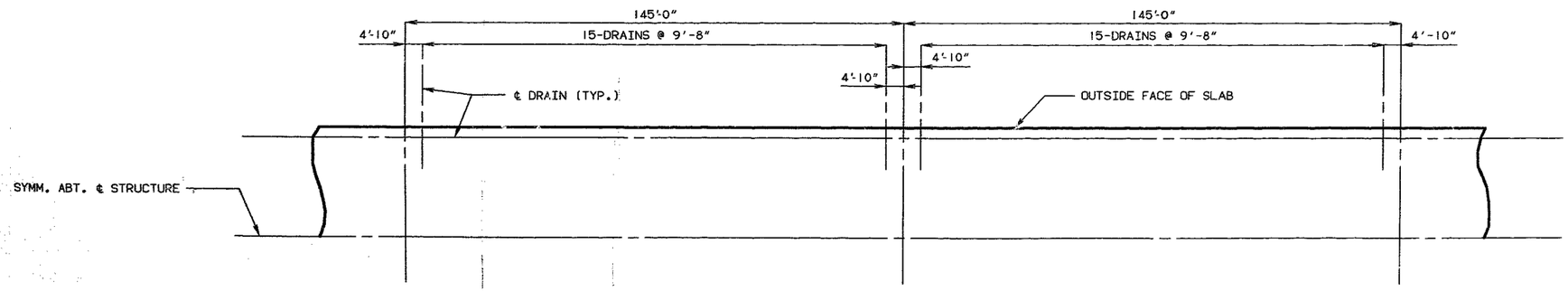

PART PLAN OF SLAB SHOWING SLAB DRAIN LOCATIONS

NOTE: PART PLAN OF SLAB SHOWING SLAB DRAINS IN THE EAST BOUND LANE WEST BOUND LANE SIMILAR. LONGITUDINAL DIMENSIONS SHOWN ARE TAKEN ALONG TOP EDGE OF SLAB PARALLEL TO GRADE.

DRAIN (GS 3.30,STL.,A
STEEL GDR DRAIN
FEB. 1975

REVISED
OCT. 1988

DETAILED SEPT. 1992
CHECKED MAY 1993

NOTE: THIS DRAWING IS NOT TO SCALE. FOLLOW DIMENSIONS.

JACKSON COUNTY

A-610R1

STATE	PROJ. NO.	SHEET NO.
MO.		337

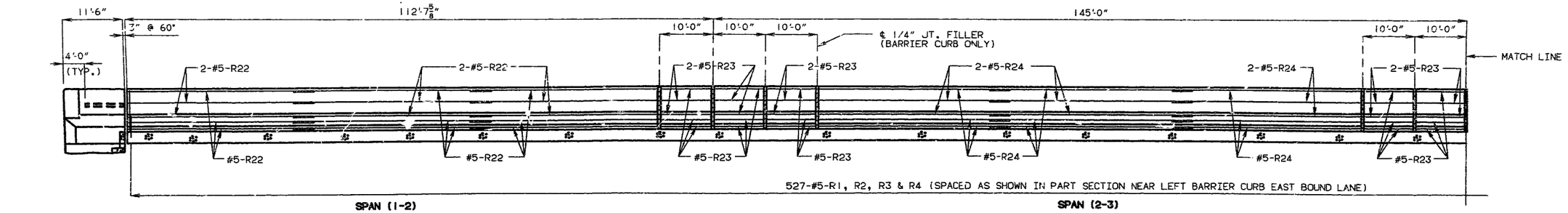

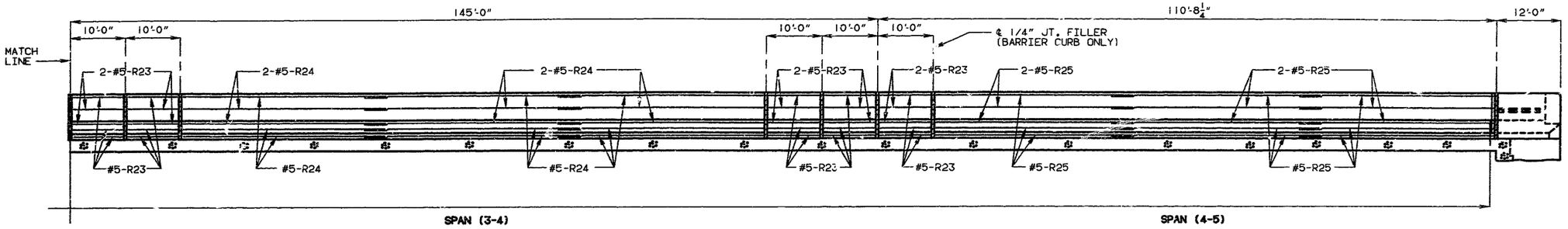

SECTION NEAR LEFT BARRIER CURB
(EAST BOUND LANE)

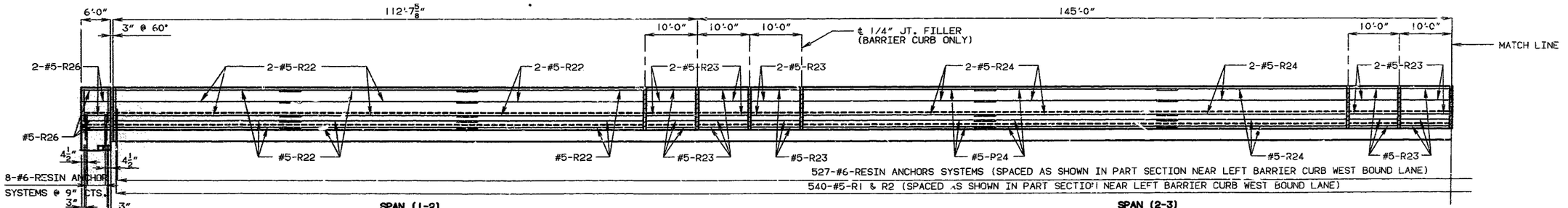

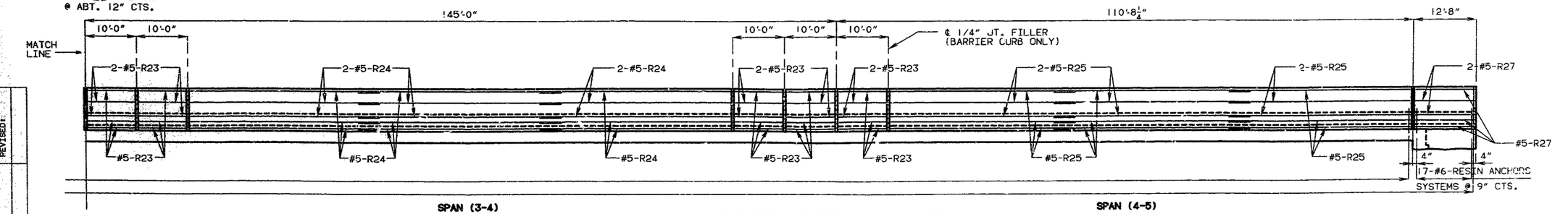

ELEVATION OF RIGHT BARRIER CURB
(EAST BOUND LANE)

NOTE: FOR PART SECTION NEAR BARRIER CURB, SECTION THRU WING AT END BENT NO. 1 AND NO. 5 AND DETAILS OF BARRIER CURB NOT SHOWN SEE SHEET NO. 42.
FOR DETAILS SHOWING WING REINFORCEMENT SEE SHEET NO. 43.

NOTE: LONGITUDINAL DIMENSIONS SHOWN ARE TAKEN ALONG TOP EDGE OF SLAB PARALLEL TO GRADE.

NOTE: THIS DRAWING IS NOT TO SCALE. FOLLOW DIMENSIONS.

REVISED:

DETAILED SEPT. 1992
CHECKED JUNE 1993

337 362

JACKSON COUNTY A-610R1

STATE	PROJ. NO.	SHEET NO.
MO.		338

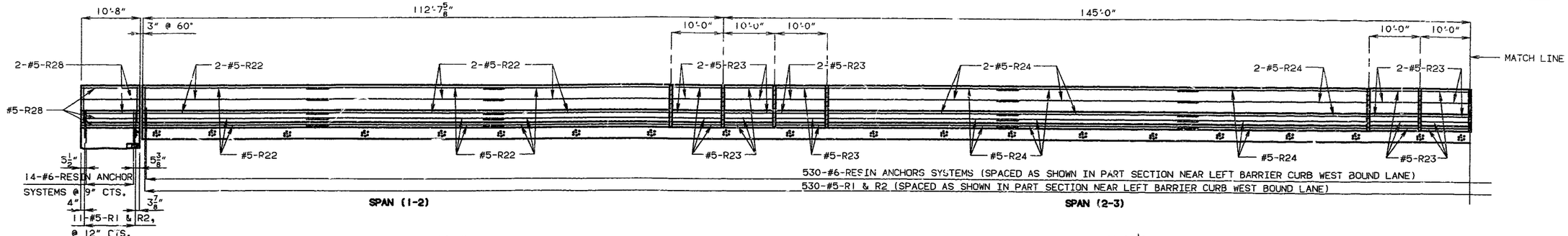

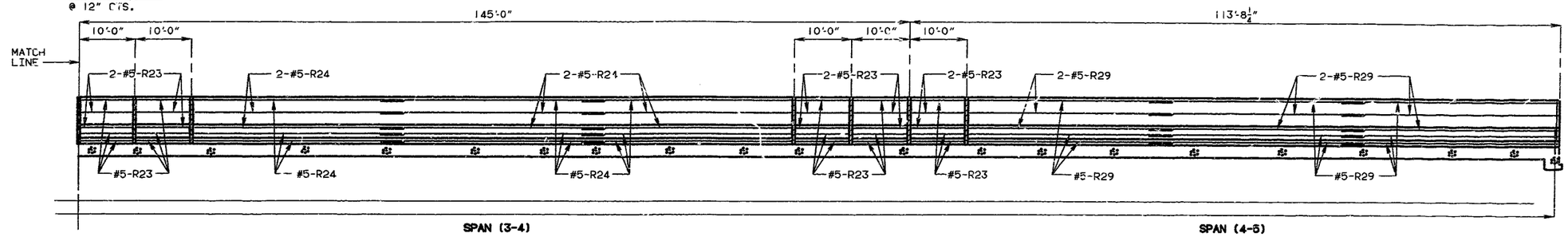

SECTION NEAR LEFT BARRIER CURB (WEST BOUND LANE)

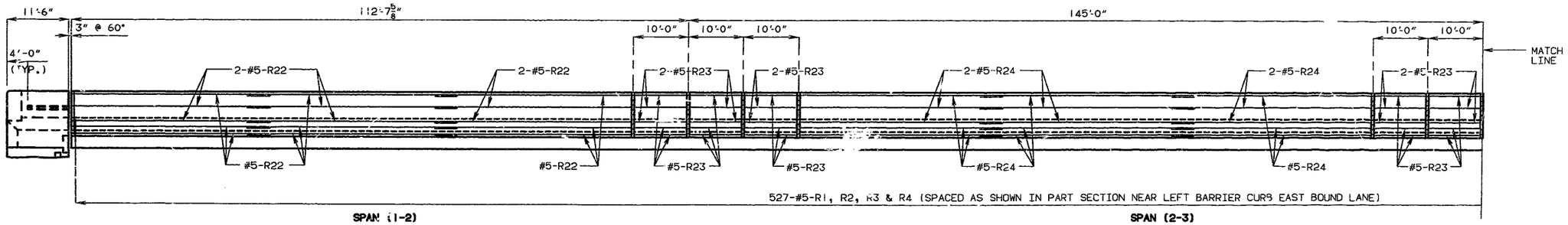

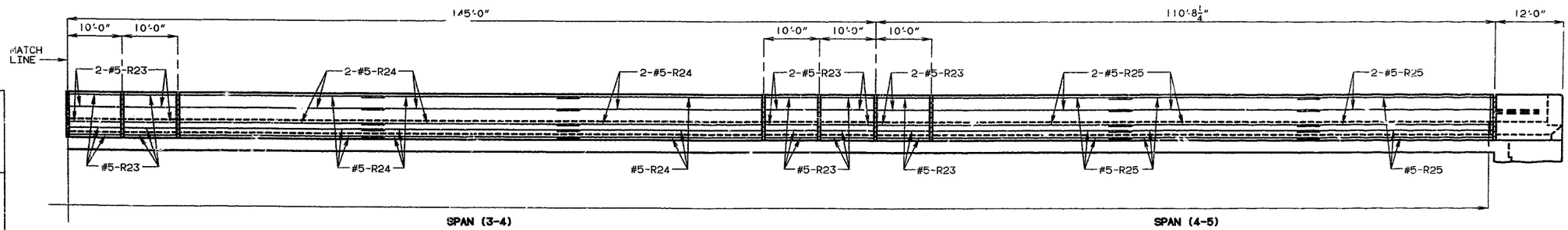

ELEVATION OF RIGHT BARRIER CURB (WEST BOUND LANE)

NOTE: FOR PART SECTION NEAR BARRIER CURB, SECTION THRU WING AT END BENT NO. 1 AND NO. 5 AND DETAILS OF BARRIER CURB NOT SHOWN SEE SHEET NO. 42.
FOR DETAILS SHOWING WING REINFORCEMENT SEE SHEET NO. 43.

NOTE: LONGITUDINAL DIMENSIONS SHOWN ARE TAKEN ALONG TOP EDGE OF SLAB PARALLEL TO GRADE.

338

REVISED

DETAILED SEPT. 1992
CHECKED JUNE 1993

NOTE: THIS DRAWING IS NOT TO SCALE. FOLLOW DIMENSIONS.

JACKSON COUNTY A-6101

STATE	PROJ. NO.	SHEET NO.
MD.		339

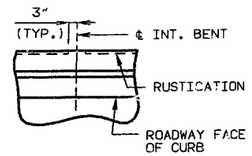

PART PLAN SHOWING RUSTICATION DETAILS

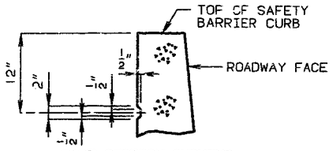

PART SECTION SHOWING RUSTICATION DETAILS

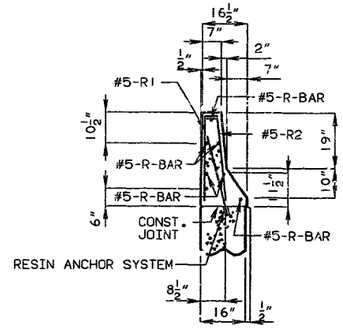

SECTION THRU WING END BENT NO. 1 RIGHT BARRIER CURB (EAST BOUND LANE), LEFT BARRIER CURB (WEST BOUND LANE) & SECTION THRU WING END BENT NO. 5 RIGHT BARRIER CURB (EAST BOUND LANE)

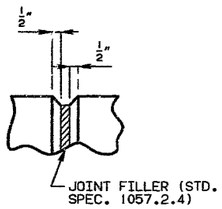

FILLED JOINT DETAIL

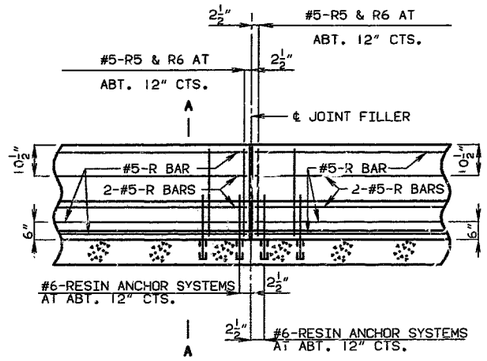

PART SECTION NEAR LEFT SAFETY BARRIER CURB WEST BOUND LANE (CAST-IN-PLACE CONVENTIONAL FORMING OPTION)

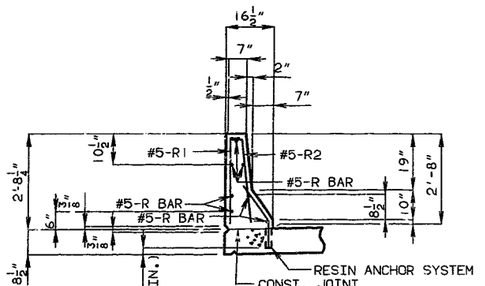

PART SECTION A-A

NOTE: USE A MINIMUM LAP OF 17" FOR #5 HORIZONTAL SAFETY BARRIER CURB BARS.
THE CROSS-SECTIONAL AREA ABOVE THE SLAB = 2.27 SQ. FT.

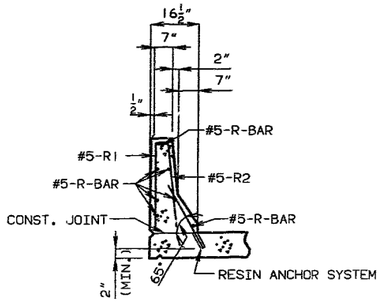

PART SECTION A-A
(OPTIONAL ANCHORING SYSTEM)

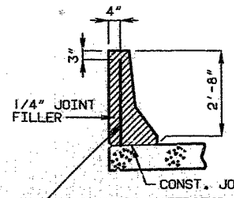

4" PLASTIC WATERSTOP STD. SPEC. 1057.2.1 (CENTERED ON JOINT)

NOTE: PLASTIC WATERSTOP SHALL BE PLACED IN ALL SAFETY BARRIER CURB FILLED JOINTS. (EXCEPT STRUCTURES WITH SUPERELEVATION, USE ON ALL LOWER SAFETY BARRIER CURB JOINT ONLY).

COST OF PLASTIC WATERSTOP COMPLETE IN PLACE TO BE INCLUDED IN CONTRACT UNIT PRICE FOR SAFETY BARRIER CURB.

DETAILS OF PLASTIC WATERSTOP

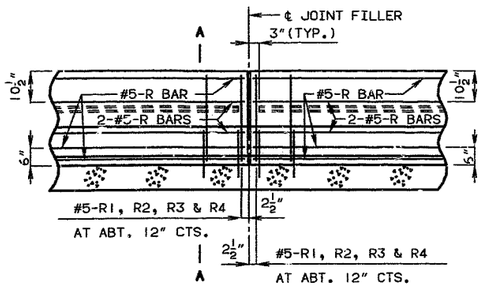

PART SECTION NEAR LEFT SAFETY BARRIER CURB EAST BOUND LANE (CAST-IN-PLACE CONVENTIONAL FORMING OPTION)

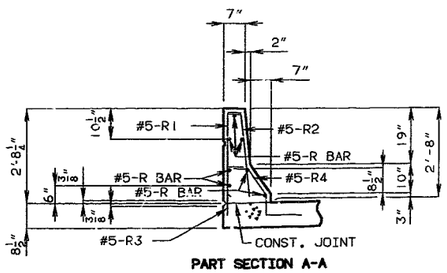

PART SECTION A-A

NOTE: USE A MINIMUM LAP OF 17" FOR #5 HORIZONTAL SAFETY BARRIER CURB BARS.
THE CROSS-SECTIONAL AREA ABOVE THE SLAB = 2.27 SQ. FT.

NOTE:

TOP OF SAFETY BARRIER CURB SHALL BE BUILT PARALLEL TO GRADE WITH SAFETY BARRIER CURB JOINTS (EXCEPT AT END BENTS) NORMAL TO GRADE.

ALL EXPOSED EDGES OF SAFETY BARRIER CURB SHALL HAVE EITHER A 1/2" RADIUS OR A 3/8" BEVEL, UNLESS OTHERWISE NOTED.

WHEN THE SAFETY BARRIER CURB IS BID BY LINEAR FEET, THE CONTRACT UNIT PRICE SHALL INCLUDE THE COST OF ALL CONCRETE AND REINFORCEMENT, COMPLETE-IN-PLACE.

CONCRETE IN THE SAFETY BARRIER CURB SHALL BE CLASS B1.

MEASUREMENT OF SAFETY BARRIER CURB IS TO THE NEAREST LINEAR FOOT FOR EACH STRUCTURE, MEASURED ALONG THE OUTSIDE TOP OF SLAB FROM END OF WING TO END OF WING.

THE CONTRACTOR SHALL USE ONE OF THE RESIN ANCHOR SYSTEMS LISTED IN THE JOB SPECIAL PROVISIONS FOR THE SAFETY BARRIER CURB.

COST OF FURNISHING AND INSTALLING THE ANCHOR SYSTEM COMPLETE IN PLACE SHALL BE INCLUDED IN THE PRICE BID PER LINEAR FOOT OF SAFETY BARRIER CURB.

B/C ELIG/GS 3.30, 1, 4A	BARRIER CURB ELEVATION	JAN. 1990
REVISED:		FEB. 1991

DETAILED SEPT. 1992
CHECKED JUNE 1993

NOTE: THIS DRAWING IS NOT TO SCALE. FOLLOW DIMENSIONS.

STATE	PROJ. NO.	SHEET NO.
MO.		340

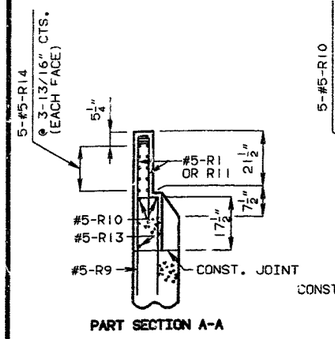

PART SECTION A-A

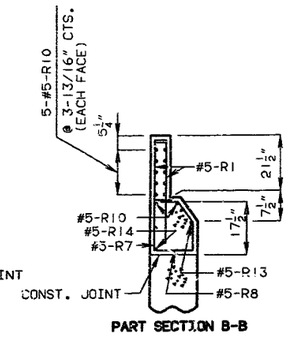

PART SECTION B-B

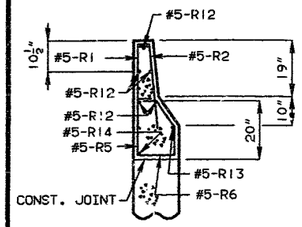

PART SECTION C-C

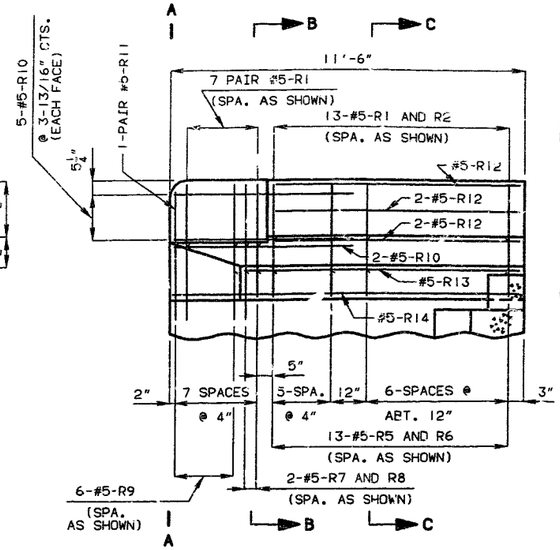

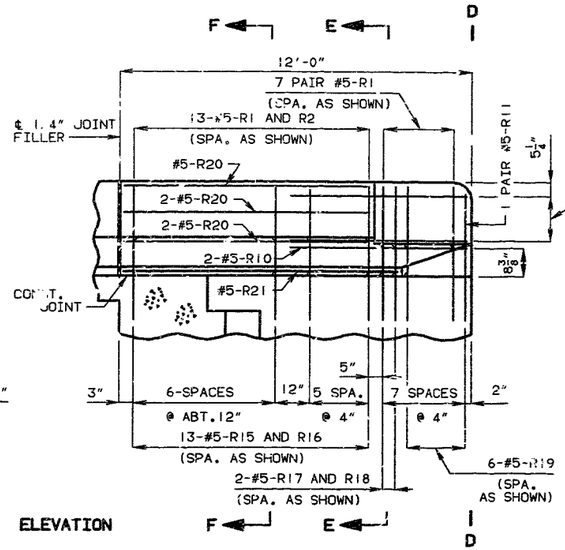

ELEVATION

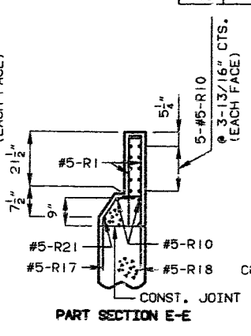

PART SECTION E-E

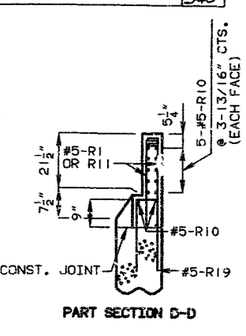

PART SECTION D-D

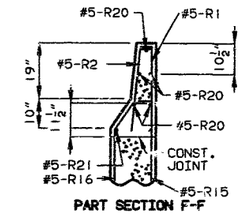

PART SECTION F-F

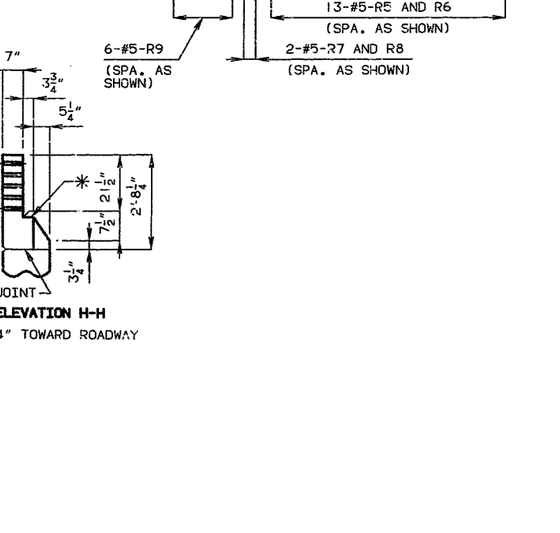

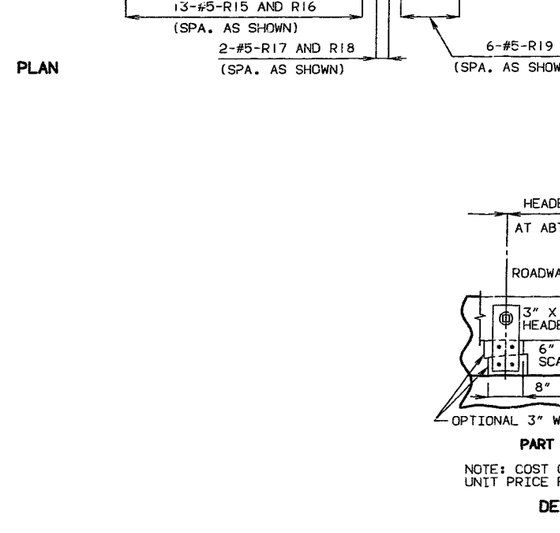

PLAN

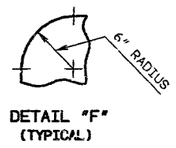

DETAIL "F" (TYPICAL)

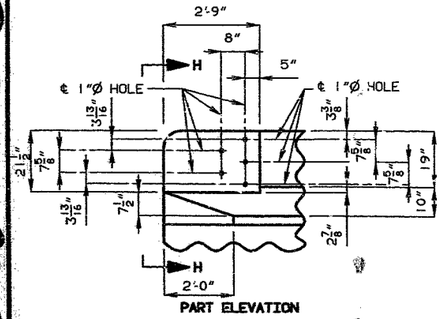

PART ELEVATION

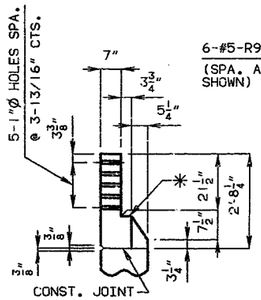

PART ELEVATION H-H

* SLOPE 1/4" TOWARD ROADWAY

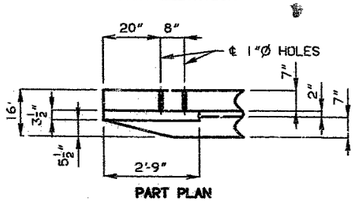

PART PLAN

DETAILS OF GUARD RAIL ATTACHMENT

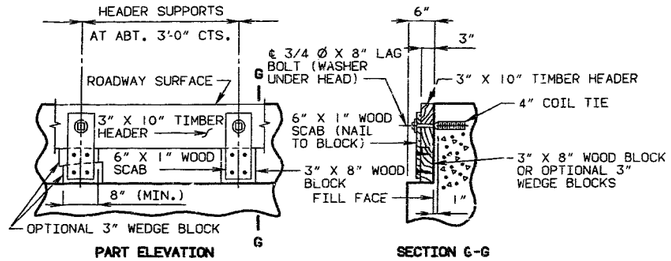

PART ELEVATION

SECTION G-G

NOTE: COST OF TIMBER HEADERS COMPLETE IN PLACE TO BE INCLUDED IN CONTRACT UNIT PRICE FOR CONCRETE.

DETAILS OF TIMBER HEADER AT END BENTS

DETAILS OF SAFETY BARRIER CURB AT END BENTS

365330

B/C EP16,GS 3.30,INT, ,A
INT-END POST (16')
AUG. 1978
REVISED
MARCH 1992

DETAILED SEPT. 1992
CHECKED JUNE 1993

NOTE: THIS DRAWING IS NOT TO SCALE. FOLLOW DIMENSIONS.

JACKSON COUNTY

A-6!0R!

STATE	PROJ. NO.	SHEET NO.
MD.		341

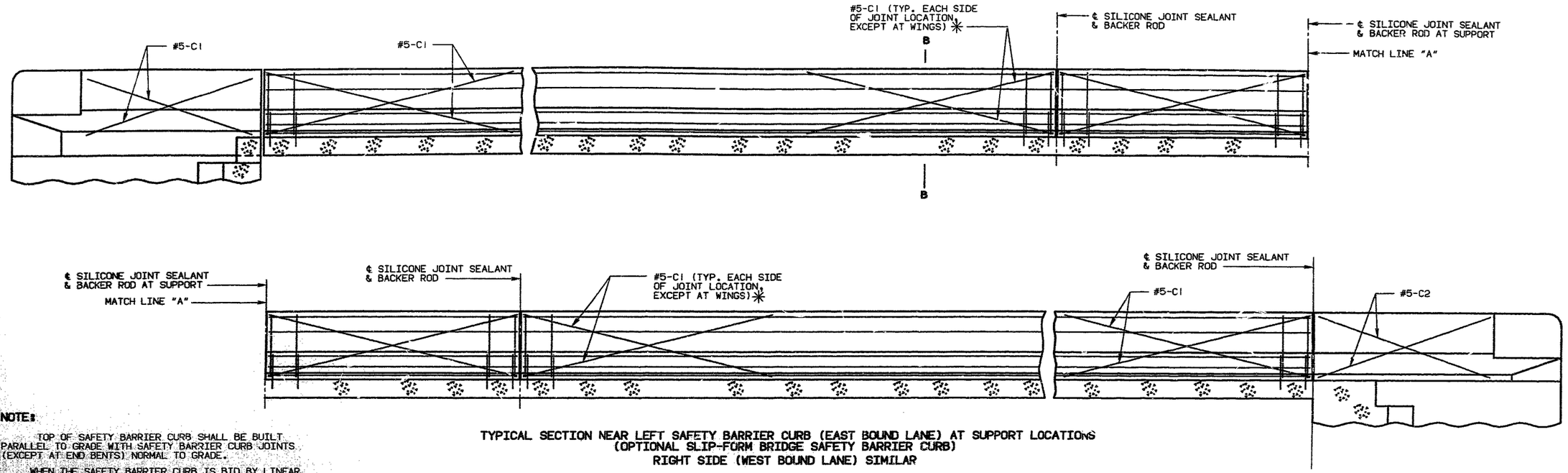

NOTE:

TOP OF SAFETY BARRIER CURB SHALL BE BUILT PARALLEL TO GRADE WITH SAFETY BARRIER CURB JOINTS (EXCEPT AT END BENTS) NORMAL TO GRADE.

WHEN THE SAFETY BARRIER CURB IS BID BY LINEAR FEET, THE CONTRACT UNIT PRICE SHALL INCLUDE THE COST OF ALL CONCRETE AND REINFORCEMENT, COMPLETE-IN-PLACE.

CONCRETE IN THE SAFETY BARRIER CURB SHALL BE CLASS B1.

MEASUREMENT OF SAFETY BARRIER CURB IS TO THE NEAREST LINEAR FOOT FOR EACH STRUCTURE, MEASURED ALONG THE OUTSIDE TOP OF SLAB FROM END OF WING TO END OF WING.

TYPICAL SECTION NEAR LEFT SAFETY BARRIER CURB (EAST BOUND LANE) AT SUPPORT LOCATIONS (OPTIONAL SLIP-FORM BRIDGE SAFETY BARRIER CURB) RIGHT SIDE (WEST BOUND LANE) SIMILAR

NOTE:

JOINT SEALANT AND BACKER RODS SHALL BE USED ON ALL SLIP-FORM BRIDGE SAFETY BARRIER CURBS INSTEAD OF JOINT FILLER.

PLASTIC WATERSTOP SHALL NOT BE USED WITH SLIP-FORM OPTION.

C-BARS (SLIP-FORM OPTION ONLY) SHALL BE USED IN ADDITION TO CAST-IN-PLACE CONVENTIONAL FORMING REINFORCEMENT FOR BRIDGE SAFETY BARRIER CURB.

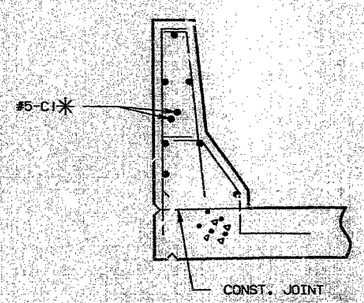

PART SECTION B-B

NOTE: ✳ EACH SIDE OF JOINT LOCATION, EXCEPT SPAN SIDE ONLY AT END BENTS.

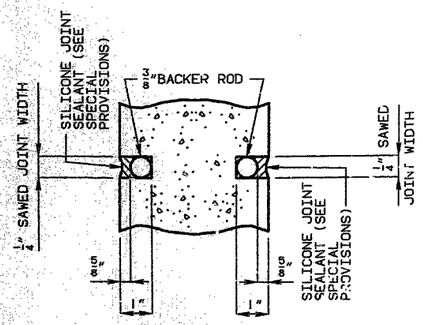

SECTION A-A

NOTE: COST OF SILICONE JOINT SEALANT AND BACKER ROD COMPLETE IN PLACE TO BE INCLUDED IN THE CONTRACT UNIT PRICE FOR SAFETY BARRIER CURB.

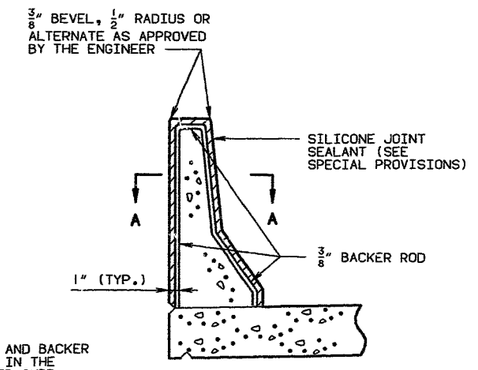

SECTION THRU JOINT

OPTIONAL SLIP-FORM BRIDGE SAFETY BARRIER CURB

B/C SF16,GS 70, 1, A
BARRIER CURB ELEVATION REVISED:
FEB. 1991

DETAILED SEPT. 1992
CHECKED MAY 1993

NOTE: THIS DRAWING IS NOT TO SCALE. FOLLOW DIMENSIONS.

JACKSON COUNTY

A-610R1

STATE	PROJ. NO.	SHEET NO.
MO.		342

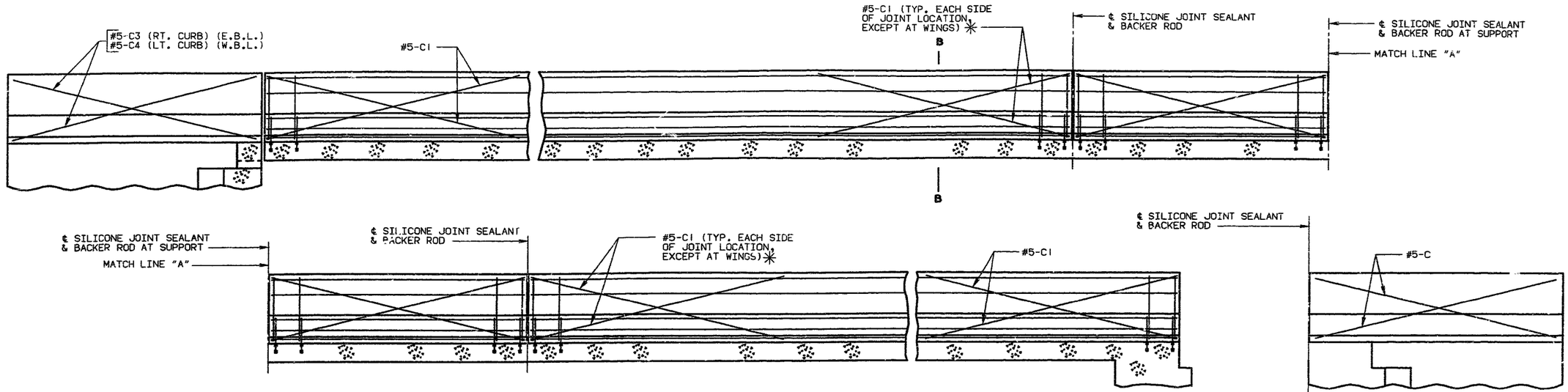

TYPICAL SECTION NEAR LEFT SAFETY BARRIER CURB (WEST BOUND LANE) AT SUPPORT LOCATIONS
(OPTIONAL SLIP-FORM BRIDGE SAFETY BARRIER CURB)
RIGHT SIDE (EAST BOUND LANE) SIMILAR

ELEVATION OF WING AT BENT NO. 5
(EAST BOUND LANE)

NOTE:

TOP OF SAFETY BARRIER CURB SHALL BE BUILT PARALLEL TO GRADE WITH SAFETY BARRIER CURB JOINTS (EXCEPT AT END BENTS) NORMAL TO GRADE.

WHEN THE SAFETY BARRIER CURB IS BID BY LINEAR FEET, THE CONTRACT UNIT PRICE SHALL INCLUDE THE COST OF ALL CONCRETE AND REINFORCEMENT, COMPLETE-IN-PLACE.

CONCRETE IN THE SAFETY BARRIER CURB SHALL BE CLASS B1.

MEASUREMENT OF SAFETY BARRIER CURB IS TO THE NEAREST LINEAR FOOT FOR EACH STRUCTURE, MEASURED ALONG THE OUTSIDE TOP OF SLAB FROM END OF WING TO END OF WING.

NOTE:

JOINT SEALANT AND BACKER RODS SHALL BE USED ON ALL SLIP-FORM BRIDGE SAFETY BARRIER CURBS INSTEAD OF JOINT FILLER.

PLASTIC WATERSTOP SHALL NOT BE USED WITH SLIP-FORM OPTION.

C-BARS (SLIP-FORM OPTION ONLY) SHALL BE USED IN ADDITION TO CAST-IN-PLACE CONVENTIONAL FORMING REINFORCEMENT FOR BRIDGE SAFETY BARRIER CURB.

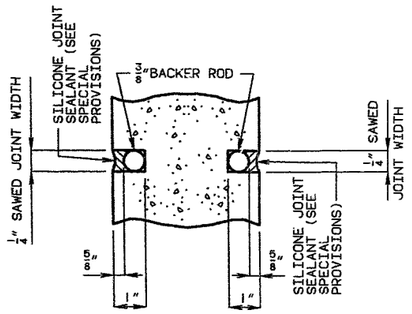

SECTION A-A

NOTE: COST OF SILICONE JOINT SEALANT AND BACKER ROD COMPLETE IN PLACE TO BE INCLUDED IN THE CONTRACT UNIT PRICE FOR SAFETY BARRIER CURB.

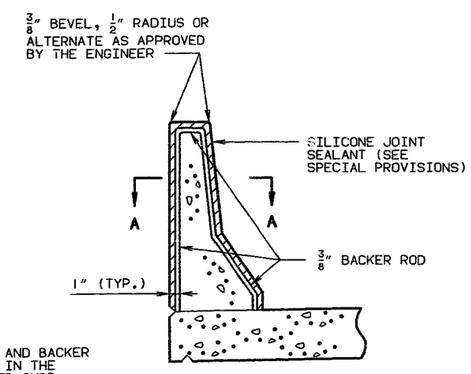

SECTION THRU JOINT

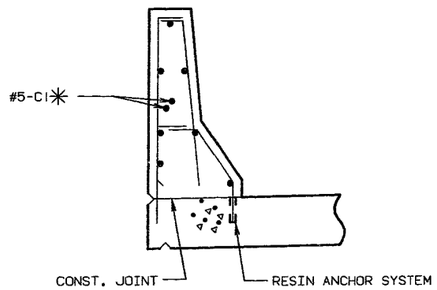

PART SECTION B-B

NOTE: ✳ EACH SIDE OF JOINT LOCATION, EXCEPT SPAN SIDE ONLY AT END BENTS.

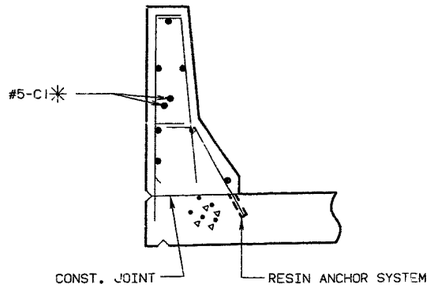

PART SECTION B-B
(OPTIONAL ANCHORING SYSTEM)

OPTIONAL SLIP-FORM BRIDGE SAFETY BARRIER CURB

B/C SF16,GS 3 ... A
BARRIER CURB ELEVATION REVISED:
FEB. 1991

DETAILED MAY 1993
CHECKED MAY 1993

NOTE: THIS DRAWING IS NOT TO SCALE. FOLLOW DIMENSIONS.

SHEET NO. 45 OF 51.

JACKSON COUNTY

A-610R1

BILL OF REINFORCING STEEL

NO. REQ'D.	MARK NO. SIZE	MARK NO. MARK	LOCATION	EPOXY (E)	SHAPE NO.	STIRRUP (S)	SUBSTR. (X)	VARIES (V)	NO. EACH	DIMENSIONS B FT. IN.	C FT. IN.	D FT. IN.	E FT. IN.	F FT. IN.	H FT. IN.	K FT. IN.	NOMINAL LENGTH FT. IN.	ACTUAL LENGTH FT. IN.	WEIGHT LBS.
			SUBSTRUCTURE																
			END BT NO 1																
			(E.B.L.)																
30	6D1		FOOTING		20		X			3 5.000							3 5	3 5	154
8	6F1		WING BRACE		15		X			14.000	4 7.875	14.000	9.875	9.875	9.875	9.875	7 0	6 11	83
2	6H1		BACKWALL	E	20		X			21 8.000							21 8	21 8	65
2	6H2		BACKWALL	E	20		X			45 2.000							45 2	45 2	136
2	4H3		BACKWALL		20		X			21 10.000							21 10	21 10	29
4	4H4		BACKWALL		20		X			24 2.000							24 2	24 2	65
6	4H5		BACKWALL		20		X			14 5.000							14 5	14 5	58
6	4H6		BACKWALL		20		X			5 3.000							5 3	5 3	21
8	6H7		BEAM		18		X			14 5.000							15 9	15 9	189
2	6H8		BEAM		20		X			14 5.000							14 5	14 5	43
8	6H9		BEAM		18		X			5 3.000							6 7	6 7	79
2	6H10		BEAM		20		X			5 3.000							5 3	5 3	16
1	4H11		APP. HCH.		20		X			18 10.000							18 10	18 10	13
2	4H12		APP. HCH.		20		X			22 10.000							22 10	22 10	31
2	6H13		WING	E	20		X			5 9.000							5 9	5 9	17
4	6H14		WING		20		X			5 9.000							5 9	5 9	35
18	6H15		WING		20		X	V	2	2 7.000							2 7	2 7	
			INCREMENT =							5 8.000							5 8	5 8	112
			4.625 INCH																
4	6H16		WING		20		X			11 3.000							11 3	11 3	68
13	6H17		WING		20		X	V	2	3 4.000							3 4	3 4	
			INCREMENT =							11 1.000							11 1	11 1	195
			11.625 INCH																
10	4H18		CURTAIN WALL		20		X			2 6.000							2 6	2 6	17
2	6T1		WING		25		X			2 2.000	7 2.875	19.000			6 5.125	3 3.875	11 0	10 11	33
2	6T2		WING		25		X			16.000	10 11.625	20.000			6 8.750	8 8.000	14 0	13 11	42
2	4T3		WING		19		X			6 8.000	3 2.000						9 10	9 9	13
17	6U1		BEAM		13 S		X			2 6.000	23.000	2 6.000	23.000				10 2	9 8	247
6	6U2		BEAM		13 S		X			2 6.000	2 2.875	2 6.000	2 2.875				10 10	10 4	93
6	4U3		BEAM		10 S		X				6.000	2 6.000					3 6	3 4	13
64	4U4		APP. HCH.		10 S		X				5.000	15.000					2 3	2 1	89
38	5V1		BACKWALL	E	20		X			7 3.000							7 3	7 3	287
94	5V2		BACKWALL	E	20		X			2 2.000							2 2	2 2	212
2	6V3		WING		20		X			3 9.000							3 9	3 9	11
6	6V4		WING		20		X	V	2	5 8.000							5 8	5 8	
			INCREMENT =							7 7.000							7 7	7 7	60
			11.500 INCH																
6	6V5		WING		20		X			8 6.000							8 6	8 6	77
2	6V6		WING		20		X			2 0.000							2 0	2 0	6
4	6V7		WING	E	17		X	V	1	3 7.000							4 3	4 3	
			INCREMENT =							5 6.000							6 2	6 2	31
			7.625 INCH																
7	6V8		WING	E	17		X	V	1	6 2.000							6 10	6 10	
			INCREMENT =							8 5.000							9 1	9 1	84
			4.500 INCH																
4	6V9		WING	E	20		X	V	1	3 9.000							3 9	3 9	
			INCREMENT =							5 8.000							5 8	5 8	28
			7.625 INCH																

BILL OF REINFORCING STEEL

NO. REQ'D.	MARK NO. SIZE	MARK NO. MARK	LOCATION	EPOXY (E)	SHAPE NO.	STIRRUP (S)	SUBSTR. (X)	VARIES (V)	NO. EACH	DIMENSIONS B FT. IN.	C FT. IN.	D FT. IN.	E FT. IN.	F FT. IN.	H FT. IN.	K FT. IN.	NOMINAL LENGTH FT. IN.	ACTUAL LENGTH FT. IN.	WEIGHT LBS
7	6V10		WING	E	20		X	V	1	6 4.000							6 4	6 4	
			INCREMENT =							8 7.000							8 7	8 7	78
			4.500 INCH																
3	6V11		WING	E	17		X			8 9.000							9 5	9 5	42
3	6V12		WING	E	20		X			8 11.000							8 11	8 11	40
2	4V13		CURTAIN WALL		20		X			6 3.000							6 3	6 3	8
6	W5W10		A.B. WELLS		22		X			12.000	9.125						19 9	19 9	20
			END BT NO 1																
			(W.B.L.)																
40	6D1		FOOTING		20		X			3 5.000							3 5	3 5	205
22	6D2		FOOTING		20		X			5 8.000							5 8	5 8	187
10	6F1		WING BRACE		15		X			14.000	4 7.875	14.000	9.875	9.875	9.875	9.875	7 0	6 11	104
2	6H19		BACKWALL	E	20		X			57 2.000							57 2	57 2	172
2	6H20		BACKWALL	E	20		X			21 8.000							21 8	21 8	65
4	4H21		BACKWALL		20		X			30 6.000							30 6	30 6	81
2	4H22		BACKWALL		20		X			21 10.000							21 10	21 10	29
6	4H23		BACKWALL		20		X			17 3.000							17 3	17 3	69
6	4H24		BACKWALL		20		X			14 5.000							14 5	14 5	58
8	6H25		BEAM		18		X			17 3.000							18 7	18 7	223
2	6H26		BEAM		20		X			17 3.000							17 3	17 3	52
8	6H27		BEAM		18		X			14 5.000							15 9	15 9	189
2	6H28		BEAM		20		X			14 5.000							14 5	14 5	43
2	4H29		APP. HCH.		20		X			28 9.000							28 9	28 9	38
1	4H30		APP. HCH.		20		X			18 10.000							18 10	18 10	13
4	6H31		WING		20		X			11 3.000							11 3	11 3	68
18	6H32		WING		20		X	V	2	3 1.000							3 1	3 1	
			INCREMENT =							11 1.000							11 1	11 1	192
			12.000 INCH																
10	4H33		CURTAIN WALL		20		X			2 6.000							2 6	2 6	17
18	4H34		WING		20		X			10 5.000							10 5	10 5	125
10	4H35		CURTAIN WALL		20		X			2 6.000							2 6	2 6	17
2	6T4		WING		25		X			16.000	10 10.250	21.000			6 6.500	8 7.875	13 11	13 10	42
2	4T5		CURTAIN WALL		19		X			6 8.000	3 2.000						9 10	9 9	13
2	4T6		CURTAIN WALL		19		X			6 10.000	3 2.000						10 0	9 11	13
6	6U3		BEAM		10 S		X				6.000	2 6.000					3 6	3 2	29
73	4U4		APP. HCH.		10 S		X				5.000	15.000					2 3	2 1	102
21	6U5		BEAM		13 S		X			2 6.000	2 0.875	2 6.000	2 0.875				10 6	10 0	315
17	6U6		BEAM		13 S		X			2 6.000	23.000	2 6.000	23.000				10 2	9 8	247
62	5V1		BACKWALL	E	20		X			7 3.000							7 3	7 3	469
94	5V2		BACKWALL	E	20		X			2 2.000							2 2	2 2	212
2	6V14		WING		20		X			2 0.000							2 0	2 0	6
4	6V15		WING	E	17		X	V	1	3 7.000							4 3	4 3	
			INCREMENT =							5 5.000							6 1	6 1	31
			7.375 INCH																
7	6V16		WING	E	17		X	V	1	6 2.000							6 10	6 10	
			INCREMENT =							8 3.000							8 11	8 11	83
			4.125 INCH																

STATE | PROJ. NO. | SHEET NO. 343
MO.

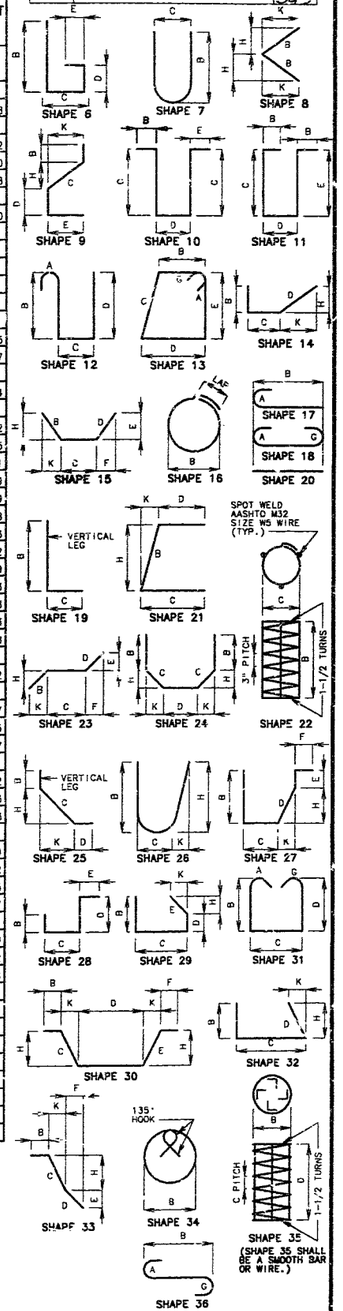

BENDING DIAGRAMS

STD 90.8 REVISED OCT. 1991
MAY 1974

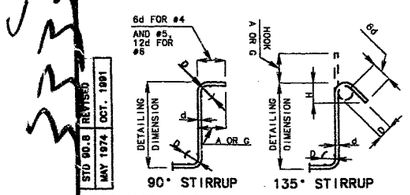

DETAILED AUG. 1993
CHECKED AUG. 1993

STIRRUP HOOK DIMENSIONS GRADES 40 - 50 - 60 KSI				
BAR SIZE	D (IN.)	90° HOOK HOOK A OR G	135° HOOK HOOK A OR G	135° HOOK APPROX. H
#4	2"	4-1/2"	4-1/2"	3"
#5	2-1/2"	6"	5-1/2"	3-3/4"
#6	4-1/2"	12"	8"	4-1/2"

NOTE: UNLESS OTHERWISE NOTED DIAMETER "D" IS THE SAME FOR ALL BENDS AND HOOKS ON A BAR.

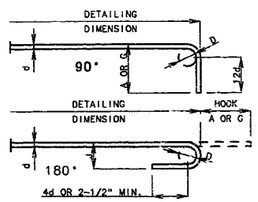

NOTE: THIS DRAWING IS NOT TO SCALE. FOLLOW DIMENSIONS.

TWO ADDITIONAL ARE INCLUDED IN THE BAR BILL FOR TESTING.

END HOOK DIMENSIONS					
BAR SIZE	D (IN.)	ALL GRADES 180° HOOK A OR G	180° HOOK J	90° HOOKS A OR G
#3	2-1/4"	5"	3"	6"
#4	3"	6"	4"	8"
#5	3-3/4"	7"	5"	10"
#6	4-1/2"	8"	6"	12"
#7	5-1/4"	10"	7"	14"
#8	6"	11"	8"	16"
#9	9-1/2"	15"	11-3/4"	19"
#10	10-3/4"	17"	13-1/4"	22"
#11	12"	19"	14-3/4"	2'-0"
#14	18-1/4"	2'-3"	21-3/4"	2'-7"

NOTE:
ALL STANDARD HOOKS AND BENDS OTHER THAN 180 DEG. TO BE BENT WITH THE SAME PROCEDURE AS FOR 90 DEG. STD. HOOKS.
HOOKS AND BENDS SHALL BE IN ACCORDANCE WITH THE PROCEDURES AS SHOWN ON THIS SHEET.
E = EPOXY COATED REINFORCEMENT.
S = STIRRUP.
X = BAR IS INCLUDED IN SUBSTRUCTURE QUANTITIES.
V = BAR DIMENSIONS VARY IN EQUAL INCREMENTS BETWEEN DIMENSIONS SHOWN ON THIS LINE AND THE FOLLOWING LINE.
NO. EA. = NUMBER OF BARS OF EACH LENGTH.
NOMINAL LENGTHS ARE BASED ON OUT TO OUT DIMENSIONS SHOWN IN BENDING DIAGRAMS AND ARE LISTED FOR FABRICATORS USE. (NEAREST INCH)
ACTUAL LENGTHS ARE MEASURED ALONG CENTERLINE BAR TO THE NEAREST INCH.
PAYWEIGHTS ARE BASED ON ACTUAL LENGTHS.
FOUR ANGLE OR CHANNEL SPACERS ARE REQUIRED FOR EACH COLUMN SPIRAL. SPACERS ARE TO BE PLACED ON INSIDE OF SPIRALS. LENGTH AND WEIGHT OF COLUMN SPIRALS DO NOT INCLUDE SPLICES OR SPACERS.
REINFORCING STEEL (GRADE 60) = FY 60,000 PSI.

SHEET NO. 46 OF 51.

JACKSON COUNTY

A-610R1

BILL OF REINFORCING STEEL

NO. REQ'D.	MARK NO. SIZE	MARK NO. MARK	LOCATION	EPOXY (E)	SHAPE NO.	STIRRUP (S)	SUBSTR. (X)	VARIES (V)	NO. EACH	DIMENSIONS B FT. IN.	C FT. IN.	D FT. IN.	E FT. IN.	F FT. IN.	H FT. IN.	K FT. IN.	NOMINAL LENGTH FT.IN.	ACTUAL LENGTH FT.IN.	WEIGHT LBS.
4	6	V17	WING	E	20		X	V	1	3 9.000							3 9	3 9	
			INCREMENT =							5 7.000							5 7	5 7	28
			7.375 INCH																
7	6	V18	WING	E	20		X	V	1	6 4.000							6 4	6 4	
			INCREMENT =							8 5.000							8 5	8 5	78
			4.125 INCH																
3	6	V19	WING	E	17		X			8 7.000							9 3	9 3	42
3	6	V20	WING	E	20		X			8 9.000							8 9	8 9	39
2	4	V21	CURTAIN WALL		20		X			6 3.000							6 3	6 3	3
22	6	V22	WING		20		X	V	2	6 1.000							6 1	6 1	
			INCREMENT =							6 5.000							6 5	6 5	207
			0.375 INCH																
2	4	V23	CURTAIN WALL		20		X			6 5.000							6 5	6 5	9
8	W	5W10	A.B. WELLS		22		X			12.000	9.125						19 9	19 9	26
			INT. BT NO 2																
			(E.B.L.)																
46	8	D3	FOOTING		20		X			7 8.000							7 8	7 8	942
28	8	D4	FOOTING		20		X			14 8.000							14 8	14 8	1096
20	7	D5	FOOTING		20		X			8 8.000							8 8	8 8	354
4	6	D6	FOOTING		10		X				5 0.000	14 0.000					24 0	23 8	142
5	9	H36	BEAM		18		X			6 3.000							8 9	8 9	149
4	6	H37	BEAM		20		X			5 11.000							5 11	5 11	36
4	9	H38	BEAM		18		X			5 11.000							8 5	8 5	114
5	9	H39	BEAM		20		X			6 3.000							6 3	6 3	106
4	9	H40	BEAM		20		X			5 11.000							5 11	5 11	80
8	7	H41	BEAM		7		X			4 9.000	4 1.750						11 9	11 9	192
4	9	H42	BEAM		18		X			14 10.000							17 4	17 4	236
5	9	H43	BEAM		18		X			15 2.000							17 8	17 8	300
5	9	H44	BEAM		20		X			15 2.000							15 2	15 2	258
4	9	H45	BEAM		20		X			14 10.000							14 10	14 10	202
4	6	H46	BEAM		20		X			14 10.000							14 10	14 10	89
8	9	H47	WEB		20		X			19 9.000							19 9	19 9	537
4	9	H48	WEB		20		X			20 5.000							20 5	20 5	278
4	9	H49	WEB		20		X			21 6.000							21 6	21 6	292
2	6	H50	WEB		20		X			21 6.000							21 6	21 6	65
6	8	H51	TIE BEAM		20		X			13 5.000							13 5	13 5	215
10	4	H52	TIE BEAM		20		X			11 4.000							11 4	11 4	76
6	8	H53	TIE BEAM		20		X			18 1.000							18 1	18 1	290
10	4	H54	TIE BEAM		20		X			16 0.000							16 0	16 0	107
86	4	P1	COLUMN		16		X			3 9.000							12 8	12 8	728
1	5	U7	BEAM		13	S	X			2 4.875	3 9.875	2 4.875	3 9.875				13 5	13 1	14
1	5	U8	BEAM		13	S	X			3 11.750	3 9.875	3 11.750	3 9.875				16 6	16 3	17
4	5	U9	BEAM		13	S	X			4 3.000	3 9.875	4 3.000	3 9.875				17 1	16 9	70
5	5	U10	BEAM		13	S	X			4 3.000	3 6.000	4 3.000	3 6.000				16 5	16 1	84
24	5	U11	BEAM		13	S	X			2 10.000	3 6.000	2 10.000	3 6.000				13 7	13 3	332
2	5	U12	BEAM		13	S	X			2 7.875	3 6.000	2 7.875	3 6.000				13 3	12 11	27
1	5	U13	BEAM		13	S	X			2 4.875	3 6.000	2 4.875	3 6.000				12 9	12 5	13
4	4	U14	BEAM		10	S	X				6.000	4 3.000					5 3	5 1	14
20	5	U15	WEB		13	S	X			3 9.000	2 9.000	3 9.000	2 9.000				13 11	13 7	283
25	4	U16	TIE BEAM		13	S	X			21.000	5 9.000	21.000	5 9.000				15 9	15 6	259
2	4	U60	BEAM		10	S	X				6.000	3 5.250					4 5	4 3	6

BILL OF REINFORCING STEEL

NO. REQ'D.	MARK NO. SIZE	MARK NO. MARK	LOCATION	EPOXY (E)	SHAPE NO.	STIRRUP (S)	SUBSTR. (X)	VARIES (V)	NO. EACH	DIMENSIONS B FT. IN.	C FT. IN.	D FT. IN.	E FT. IN.	F FT. IN.	H FT. IN.	K FT. IN.	NOMINAL LENGTH FT.IN.	ACTUAL LENGTH FT.IN.	WEIGHT LBS.
46	8	V24	COLUMN		20		X			29 2.000							29 2	29 2	3582
46	8	V25	COLUMN		20		X			20 10.000							20 10	20 10	2559
6	W	5W20	A.B. WELLS		20		X			12.000	9.125						19 9	19 9	20
			INT. BT NO 2																
			(W.B.L.)																
46	8	D3	FOOTING		20		X			7 8.000							7 8	7 8	942
20	7	D7	FOOTING		20		X			10 2.000							10 2	10 2	416
12	7	D8	FOOTING		20		X			7 8.000							7 8	7 8	188
4	6	D9	FOOTING		10		X				4 6.000	9 6.000					18 6	18 2	109
8	7	H41	BEAM		7		X			4 9.000	4 1.750						11 9	11 9	192
4	9	H42	BEAM		18		X			14 10.000							17 4	17 4	236
5	9	H43	BEAM		18		X			15 2.000							17 8	17 8	300
5	9	H44	BEAM		20		X			15 2.000							15 2	15 2	258
4	9	H45	BEAM		20		X			14 10.000							14 10	14 10	202
4	6	H46	BEAM		20		X			14 10.000							14 10	14 10	89
8	9	H47	WEB		20		X			19 9.000							19 9	19 9	537
4	9	H48	WEB		20		X			20 5.000							20 5	20 5	278
4	9	H49	WEB		20		X			21 6.000							21 6	21 6	292
2	6	H50	WEB		20		X			21 6.000							21 6	21 6	65
6	8	H51	TIE BEAM		20		X			18 1.000							18 1	18 1	290
10	4	H54	TIE BEAM		20		X			16 0.000							16 0	16 0	107
4	9	H55	BEAM		18		X			16 8.000							19 2	19 2	261
5	9	H56	BEAM		18		X			17 0.000							19 6	19 6	332
4	6	H57	BEAM		20		X			16 8.000							16 8	16 8	100
5	9	H58	BEAM		20		X			17 0.000							17 0	17 0	289
4	9	H59	BEAM		20		X			16 8.000							16 8	16 8	227
6	8	H60	TIE BEAM		20		X			18 8.000							18 8	18 8	299
10	4	H61	TIE BEAM		20		X			16 7.000							16 7	16 7	111
89	4	P1	COLUMN		12		X			3 9.000							12 8	12 8	753
4	5	U10	BEAM		13	S	X			4 3.000	3 6.000	4 3.000	3 6.000				16 5	16 1	67
24	5	U11	BEAM		13	S	X			2 10.000	3 6.000	2 10.000	3 6.000				13 7	13 3	332
2	5	U12	BEAM		13	S	X			2 7.875	3 6.000	2 7.875	3 6.000				13 3	12 11	27
1	5	U13	BEAM		13	S	X			2 4.875	3 6.000	2 4.875	3 6.000				12 9	12 5	13
4	4	U14	BEAM		10	S	X				6.000	4 3.000					5 3	5 1	14
20	5	U15	WEB		13	S	X			3 9.000	2 9.000	3 9.000	2 9.000				13 11	13 7	283
30	4	U16	TIE BEAM		13	S	X			21.000	5 9.000	21.000	5 9.000				15 9	15 6	311
8	5	U17	BEAM		13	S	X			4 3.000	3 8.000	4 3.000	3 8.000				16 9	16 5	137
22	5	U18	BEAM		13	S	X			2 10.000	3 8.000	2 10.000	3 8.000				13 11	13 7	312
2	5	U19	BEAM		13	S	X			2 6.000	3 8.000	2 6.000	3 8.000				13 3	12 11	27
1	5	U20	BEAM		13	S	X			17.500	3 8.000	17.500	3 8.000				11 2	10 10	11
1	4	U60	BEAM		10	S	X				6.000	3 5.250					4 5	4 3	3
1	4	U61	BEAM		10	S	X				6.000	3 0.125					4 0	3 10	3
23	8	V25	COLUMN		20		X			20 10.000							20 10	20 10	1279
46	8	V26	COLUMN		20		X			28 10.000							28 10	28 10	3541
23	8	V27	COLUMN		20		X			23 10.000							23 10	23 10	1464
8	W	5W20	A.B. WELLS		22		X			12.000	9.125						19 9	19 9	26

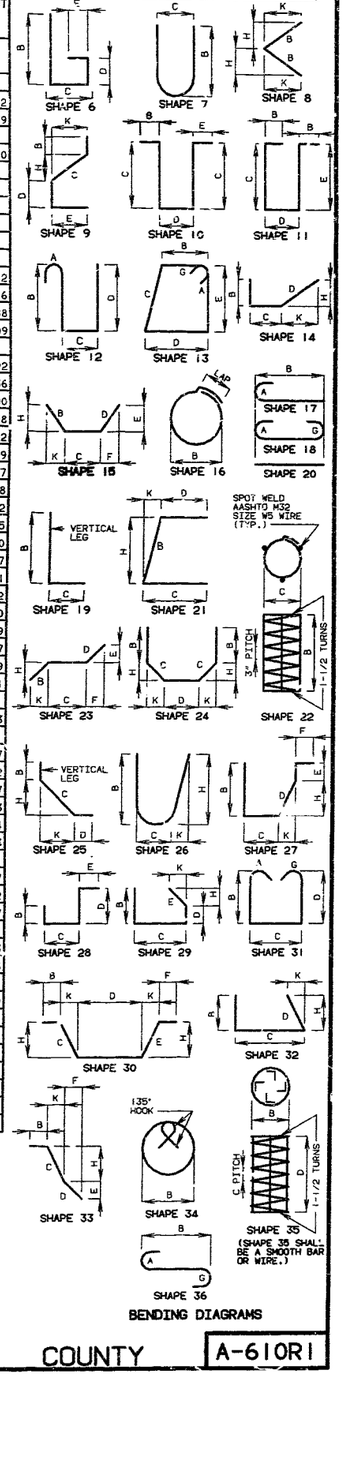

BENDING DIAGRAMS

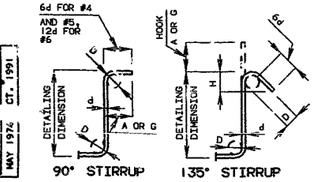

STIRRUP HOOK DIMENSIONS GRADES 40 - 50 - 60 KSI				
BAR SIZE	D (IN.)	90° HOOK A OR G	135° HOOK A OR G	APPROX. H
#4	2"	4-1/2"	4-1/2"	3"
#5	2-1/2"	6"	5-1/2"	3-3/4"
#6	4-1/2"	12"	8"	4-1/2"

NOTE: UNLESS OTHERWISE NOTED DIAMETER "D" IS THE SAME FOR ALL BENDS AND HOOKS ON A BAR.

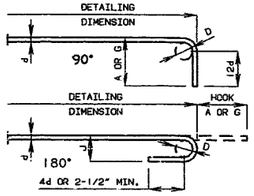

NOTE: THIS DRAWING IS NOT TO SCALE. FOLLOW DIMENSIONS.

TWO ADDITIONAL ARE INCLUDED IN THE BAR BILL FOR TESTING.

END HOOK DIMENSIONS					
BAR SIZE	D (IN.)	ALL GRADES 180° HOOKS A OR G	180° HOOKS J	90° HOOKS A OR G
#3	2-1/4"	5"	3"	6"
#4	3"	6"	4"	8"
#5	3-3/4"	7"	5"	10"
#6	4-1/2"	8"	6"	12"
#7	5-1/4"	10"	7"	14"
#8	6"	11"	8"	16"
#9	9-1/2"	15"	11-3/4"	19"
#10	10-3/4"	17"	13-1/4"	22"
#11	12"	19"	14-3/4"	2'-0"
#14	18-1/4"	2'-3"	21-3/4"	2'-7"

NOTE:
ALL STANDARD HOOKS AND BENDS OTHER THAN 180 DEG. TO BE SENT WITH THE SAME PROCEDURE AS FOR 90 DEG. STD. HOOKS.
HOOKS AND BENDS SHALL BE IN ACCORDANCE WITH THE PROCEDURES AS SHOWN ON THIS SHEET.
E = EPOXY COATED REINFORCEMENT.
S = STIRRUP.
X = BAR IS INCLUDED IN SUBSTRUCTURE QUANTITIES.
V = BAR DIMENSIONS VARY IN EQUAL INCREMENTS BETWEEN DIMENSIONS SHOWN ON THIS LINE AND THE FOLLOWING LINE.
NO. EA. = NUMBER OF BARS OF EACH LENGTH.
NOMINAL LENGTHS ARE BASED ON OUT TO OUT DIMENSIONS SHOWN IN BENDING DIAGRAMS AND ARE LISTED FOR FABRICATORS USE. (NEAREST INCH)
ACTUAL LENGTHS ARE MEASURED ALONG CENTERLINE BAR TO THE NEAREST INCH.
PAYWEIGHTS ARE BASED ON ACTUAL LENGTHS.
FOUR ANGLE OR CHANNEL SPACERS ARE REQUIRED FOR EACH COLUMN SPIRAL. SPACERS ARE TO BE PLACED ON INSIDE OF SPIRALS. LENGTH AND WEIGHT OF COLUMN SPIRALS DO NOT INCLUDE SPLICES OR SPACERS.
REINFORCING STEEL (GRADE 60) = FY 60,000 PSI.

STATE MO. | PROJ. NO. | SHEET NO. 344

STD 90.8 REVISED OCT. 1991
MAY 1974

DETAILED AUG. 1993
CHECKED AUG. 1993

SHEET NO. 47 OF 51.

JACKSON COUNTY

A-610R1

BILL OF REINFORCING STEEL

NO. REQ'D.	MARK NO. (SIZE MARK)	LOCATION	EPOXY (E)	SHAPE NO.	STIRRUP (S)	SUBSTR. (X)	VARIES (V)	NO. EACH	B (FT. IN.)	C (FT. IN.)	D (FT. IN.)	E (FT. IN.)	F (FT. IN.)	H (FT. IN.)	K (FT. IN.)	NOMINAL LENGTH (FT. IN.)	ACTUAL LENGTH (FT. IN.)	WEIGHT (LBS.)
		INT. BT NO 3																
		(E.B.L.)																
46	8D10	COLUMN		20		X			9 8.000							9 8	9 8	1187
58	8D11	FOOTING		20		X			9 11.000							9 11	9 11	1536
32	8D12	FOOTING		18		X			15 2.000							17 0	17 0	1452
26	5D13	FOOTING		18		X			8 2.000							9 4	9 4	253
5	9H62	BEAM		18		X			6 3.000							8 9	8 9	149
4	6H63	BEAM		20		X			5 11.000							5 11	5 11	36
4	9H64	BEAM		18		X			5 11.000							8 5	8 5	114
5	9H65	BEAM		20		X			6 3.000							6 3	6 3	106
4	9H66	BEAM		20		X			5 11.000							5 11	5 11	80
8	7H67	BEAM		7		X			4 9.000	4 1.750						11 9	11 9	192
4	9H68	BEAM		18		X			14 10.000							17 4	17 4	236
5	9H69	BEAM		18		X			15 2.000							17 8	17 8	300
5	9H70	BEAM		20		X			15 2.000							15 2	15 2	258
4	9H71	BEAM		20		X			14 10.000							14 10	14 10	202
4	6H72	BEAM		20		X			14 10.000							14 10	14 10	89
8	9H73	WEB		20		X			19 9.000							19 9	19 9	537
4	9H74	WEB		20		X			20 5.000							20 5	20 5	278
4	9H75	WEB		20		X			21 6.000							21 6	21 6	292
2	6H76	WEB		20		X			21 6.000							21 6	21 6	65
6	8H77	TIE BEAM		20		X			12 8.000							12 8	12 8	203
22	4H78	TIE BEAM		20		X			11 4.000							11 4	11 4	167
6	8H79	TIE BEAM		20		X			17 4.000							17 4	17 4	278
22	4H80	TIE BEAM		20		X			16 0.000							16 0	16 0	235
88	4P2	COLUMN		16		X			3 9.000							12 8	12 8	745
56	4P3	COLUMN		16		X			4 9.000							15 10	15 10	592
1	5U21	BEAM		13	S	X			2 4.875	3 9.875	2 4.875	3 9.875				13 5	13 1	14
1	5U22	BEAM		13	S	X			3 11.750	3 9.875	3 11.750	3 9.875				16 6	16 3	17
4	5U23	BEAM		13	S	X			4 3.000	3 9.875	4 3.000	3 9.875				17 1	16 9	70
5	5U24	BEAM		13	S	X			4 3.000	3 6.000	4 3.000	3 6.000				16 5	16 1	84
24	5U25	BEAM		13	S	X			2 10.000	3 6.000	2 10.000	3 6.000				13 7	13 3	332
2	5U26	BEAM		13	S	X			2 7.875	3 6.000	2 7.875	3 6.000				13 3	12 11	27
1	5U27	BEAM		13	S	X			2 4.875	3 6.000	2 4.875	3 6.000				12 9	12 5	13
4	4U28	BEAM		10	S	X				6.000	4 3.000					5 3	5 1	14
20	5U29	WEB		13	S	X			3 9.000	2 9.000	3 9.000	2 9.000				13 11	13 7	283
46	4U30	TIE BEAM		10	S	X				2 0.500	11 9.000					15 10	15 8	481
2	4U60	BEAM		10	S	X				6.000	3 5.250					4 5	4 3	6
[illegible]	8V27	[illegible]		[illegible]		[illegible]			[illegible] 0.000							46 0	46 0	5650
58	9V28	COLUMN		20		X			27 9.000							27 [illegible]	[illegible]7 9	5472
6	W5W30	A.B. WELLS		22		X			12.000	9.125						19 9	19 9	20
		INT. CT NO 3																
		(W.B.L.)																
46	8D10	COLUMN		20		X			9 8.000							9 8	9 8	1187
58	9D11	FOOTING		20		X			9 11.000							9 11	9 11	1956
32	8D12	FOOTING		16		X			15 2.000							17 0	17 0	1452
32	5D13	FOOTING		18		X			8 2.000							9 4	9 4	312

BILL OF REINFORCING STEEL

NO. REQ'D.	MARK NO. (SIZE MARK)	LOCATION	EPOXY (E)	SHAPE NO.	STIRRUP (S)	SUBSTR. (X)	VARIES (V)	NO. EACH	B (FT. IN.)	C (FT. IN.)	D (FT. IN.)	E (FT. IN.)	F (FT. IN.)	H (FT. IN.)	K (FT. IN.)	NOMINAL LENGTH (FT. IN.)	ACTUAL LENGTH (FT. IN.)	WEIGHT (LBS.)
8	7H67	BEAM		7		X			4 9.000	4 1.750						11 9	11 9	192
4	9H68	BEAM		18		X			14 10.000							17 4	17 4	236
5	9H69	BEAM		18		X			15 2.000							17 8	17 8	300
5	9H70	BEAM		20		X			15 2.000							15 2	15 2	258
4	9H71	BEAM		20		X			14 10.000							14 10	14 10	202
4	6H72	BEAM		20		X			14 10.000							14 10	14 10	89
8	9H73	WEB		20		X			19 9.000							19 9	19 9	537
4	9H74	WEB		20		X			20 5.000							20 5	20 5	278
4	9H75	WEB		20		X			21 6.000							21 6	21 6	292
2	6H76	WEB		20		X			21 6.000							21 6	21 6	65
6	8H79	TIE BEAM		20		X			17 4.000							17 4	17 4	278
22	4H80	TIE BEAM		20		X			16 0.000							16 0	16 0	235
4	9H81	BEAM		18		X			16 8.000							19 2	19 2	261
5	9H82	BEAM		18		X			17 0.000							19 6	19 6	332
4	6H83	BEAM		20		X			16 8.000							16 8	16 8	100
4	9H84	BEAM		20		X			16 8.000							16 8	16 8	227
5	9H85	BEAM		20		X			17 0.000							17 0	17 0	289
6	8H86	TIE BEAM		20		X			17 11.000							17 11	17 11	287
22	4H87	TIE BEAM		20		X			16 7.000							16 7	16 7	244
86	4P2	COLUMN		16		X			3 9.000							12 8	12 8	728
56	4P3	COLUMN		16		X			4 9.000							15 10	15 10	592
5	5U24	BEAM		13	S	X			4 3.000	3 6.000	4 3.000	3 6.000				16 5	16 1	84
24	5U25	BEAM		13	S	X			2 10.000	3 6.000	2 10.000	3 6.000				13 7	13 3	332
2	5U26	BEAM		13	S	X			2 7.875	3 6.000	2 7.875	3 6.000				13 3	12 11	27
1	5U27	BEAM		13	S	X			2 4.875	3 6.000	2 4.875	3 6.000				12 9	12 5	13
4	4U28	BEAM		10	S	X				6.000	4 3.000					3 3	5 1	14
20	5U29	WEB		13	S	X			3 9.000	2 9.000	3 9.000	2 9.000				13 11	13 7	283
58	4U30	TIE BEAM		10	S	X				2 0.500	11 9.000					15 10	15 8	607
8	5U31	BEAM		13	S	X			4 3.000	3 8.000	4 3.000	3 8.000				16 9	16 5	137
22	5U32	BEAM		13	S	X			2 10.000	3 8.000	2 10.000	3 8.000				13 11	13 7	312
2	5U33	BEAM		13	S	X			2 6.000	3 8.000	2 6.000	3 8.000				13 3	12 11	27
1	5U34	BEAM		13	S	X			17.500	3 8.000	17.500	3 8.000				11 2	10 10	11
1	4U60	BEAM		10	S	X				6.000	3 5.250					4 5	4 3	3
1	4U61	BEAM		10	S	X				6.000	3 0.125					4 0	3 10	3
58	9V28	COLUMN		20		X			27 9.000							27 9	27 9	5472
46	8V29	COLUMN		20		X			45 7.000							45 7	45 7	5599
8	W5W30	A.B. WELLS		22		X			12.000	9.125						19 9	19 9	26
		INT. PT NO 4																
		(E.B.L.)																
46	8D14	COLUMN		20		X			9 8.000							9 8	9 8	1187
58	9D15	FOOTING		20		X			9 11.000							9 11	9 11	1956
24	5D16	FOOTING		18		X			7 8.000							8 10	8 10	221
24	8D17	FOOTING		18		X			13 8.000							15 6	15 6	993
5	9H88	BEAM		18		X			6 3.000							8 9	8 9	149
4	6H89	BEAM		20		X			5 11.000							5 11	5 11	36
4	9H90	BEAM		18		X			5 11.000							8 5	8 5	114
5	9H91	BEAM		20		X			6 3.000							6 3	6 3	106
4	9H92	BEAM		20		X			5 11.000							5 11	5 11	80
8	7H93	BEAM		7		X			4 9.000	4 1.750						11 9	11 9	192
4	9H94	BEAM		18		X			14 10.000							17 4	17 4	236
5	9H95	BEAM		18		X			15 2.000							17 8	17 8	300

320-335

STD 90.8	REVISED
MAY 1974	OCT. 1991

DETAILED AUG. 1993
CHECKED AUG. 1993

STIRRUP HOOK DIMENSIONS
GRADES 40 - 50 - 60 KSI

BAR SIZE	D (IN.)	90° HOOK: HOOK A OR G	135° HOOK: HOOK A OR G	135° HOOK: APPROX. H
#4	2"	4-1/2"	4-1/2"	3"
#5	2-1/2"	6"	5-1/2"	3-3/4"
#6	4-1/2"	12"	8"	4-1/2"

NOTE: UNLESS OTHERWISE NOTED DIAMETER "D" IS THE SAME FOR ALL BENDS AND HOOKS ON A BAR.

NOTE: THIS DRAWING IS NOT TO SCALE. FOLLOW DIMENSIONS.

TWO ADDITIONAL ARE INCLUDED IN THE BAR BILL FOR TESTING.

END HOOK DIMENSIONS

BAR SIZE	D (IN.)	ALL GRADES 180° HOOKS A OR G	ALL GRADES 180° HOOKS J	ALL GRADES 90° HOOKS A OR G
#3	2-1/4"	5"	3"	6"
#4	3"	6"	4"	8"
#5	3-3/4"	7"	5"	10"
#6	4-1/2"	8"	6"	12"
#7	5-1/4"	10"	7"	14"
#8	6"	11"	8"	16"
#9	9-1/2"	15"	11-3/4"	19"
#10	10-3/4"	17"	13-1/4"	22"
#11	12"	19"	14-3/4"	2'-0"
#14	18-1/4"	2'-3"	21-3/4"	2'-7"

NOTE:
ALL STANDARD HOOKS AND BENDS OTHER THAN 180 DEG. TO BE BENT WITH THE SAME PROCEDURE AS FOR 90 DEG. STD. HOOKS.
HOOKS AND BENDS SHALL BE IN ACCORDANCE WITH THE PROCEDURES AS SHOWN ON THIS SHEET.
E = EPOXY COATED REINFORCEMENT.
S = STIRRUP.
X = BAR IS INCLUDED IN SUBSTRUCTURE QUANTITIES.
V = BAR DIMENSIONS VARY IN EQUAL INCREMENTS BETWEEN DIMENSIONS SHOWN ON THIS LINE AND THE FOLLOWING LINE.
NO. EA. = NUMBER OF BARS OF EACH LENGTH.
NOMINAL LENGTHS ARE BASED ON OUT TO OUT DIMENSIONS SHOWN IN BENDING DIAGRAMS AND ARE LISTED FOR FABRICATORS USE. (NEAREST INCH)
ACTUAL LENGTHS ARE MEASURED ALONG CENTERLINE BAR TO THE NEAREST INCH.
PAYWEIGHTS ARE BASED ON ACTUAL LENGTHS.
FOUR ANGLE OR CHANNEL SPACERS ARE REQUIRED FOR EACH COLUMN SPIRAL. SPACERS ARE TO BE PLACED ON INSIDE OF SPIRALS. LENGTH AND WEIGHT OF COLUMN SPIRALS DO NOT INCLUDE SPLICES OR SPACERS.
REINFORCING STEEL (GRADE 60) = FY 60,000 PSI.

STATE	PROJ. NO.	SHEET NO.
MO.		345

BENDING DIAGRAMS

SHEET NO. 48 OF 51. JACKSON COUNTY A-610R1

BILL OF REINFORCING STEEL

NO. REQ'D.	MARK NO. SIZE	MARK NO. MARK	LOCATION	EPOXY (E)	SHAPE NO.	STIRRUP (S)	SUBSTR. (X)	VARIES (V)	NO. EACH	DIMENSIONS B FT. IN.	C FT. IN.	D FT. IN.	E FT. IN.	F FT. IN.	H FT. IN.	K FT. IN.	NOMINAL LENGTH FT. IN.	ACTUAL LENGTH FT. IN.	WEIGHT LBS.
5	9H96		BEAM		20		X			15 2.000							15 2	15 2	258
4	9H97		BEAM		20		X			14 10.000							14 10	14 10	202
4	6H98		BEAM		20		X			14 10.000							14 10	14 10	89
8	9H99		WEB		20		X			19 9.000							19 9	19 9	7
4	9H100		WEB		20		X			20 5.000							20 5	20 5	278
4	9H101		WEB		20		X			21 6.000							21 6	21 6	292
2	6H102		WEB		20		X			21 6.000							21 6	21 6	65
6	8H103		TIE BEAM		20		X			12 8.000							12 8	12 8	203
22	4H104		TIE BEAM		20		X			11 4.000							11 4	11 4	167
6	8H105		TIE BEAM		20		X			17 4.000							17 4	17 4	278
22	4H106		TIE BEAM		20		X			16 0.000							16 0	16 0	235
74	4P4		COLUMN		16		X			3 9.000							12 8	12 8	626
48	4P5		COLUMN		16		X			4 9.000							15 10	15 10	508
1	5U35		BEAM		13	S	X			2 4.8.	3 9.875	2 4.875	3 9.875				13 5	13 1	14
1	5U36		BEAM		13	S	X			3 11.750	3 9.875	3 11.750	3 9.875				16 6	16 3	17
4	5U37		BEAM		13	S	X			4 3.000	3 9.875	4 3.000	3 9.875				17 1	16 9	70
5	5U38		BEAM		13	S	X			4 3.000	3 6.000	4 3.000	3 6.000				16 5	16 1	84
24	5U39		BEAM		13	S	X			2 10.000	3 6.000	2 10.000	3 6.000				13 7	13 3	332
2	5U40		BEAM		13	S	X			2 7.875	3 6.000	2 7.875	3 6.000				13 3	12 11	27
1	5U41		BEAM		13	S	X			2 4.875	3 6.000	2 4.875	3 6.000				12 9	12 5	13
4	4U42		BEAM		10	S	X				6.000	4 3.000					5 3	5 1	14
20	5U43		WEB		13	S	X			3 9.000	2 9.000	3 9.000	2 9.000				13 11	13 7	283
46	4U44		TIE BEAM		10	S	X				2 0.500	11 9.000					15 10	15 8	481
2	4U60		BEAM		10	S	X				6.000	3 5.250					4 5	4 3	6
46	8V30		COLUMN		20		X			39 9.000							39 9	39 9	4882
58	9V31		COLUMN		20		X			23 10.000							23 10	23 10	4700
6	W5W40		A.B. WELLS		22		X			12.000	9.125						19 9	19 9	20
			INT. BT NO 4 (W.B.L.)																
46	8D14		COLUMN		20		X			9 8.000							9 8	9 8	1187
58	9D15		FOOTING		20		X			9 11.000							9 11	9 11	1956
28	5D16		FOOTING		18		X			7 8.000							8 10	8 10	258
24	8D17		FOOTING		18		X			13 8.000							15 6	15 6	993
8	7H93		BEAM		7		X			4 9.000	4 1.750						11 9	11 9	192
4	9H94		BEAM		18		X			14 10.000							17 4	17 4	236
5	9H95		BEAM		18		X			15 2.000							17 8	17 8	300
5	9H96		BEAM		18		X			15 2.000							17 8	17 8	300
4	9H97		BEAM		20		X			14 10.000							14 10	14 10	202
4	6H98		BEAM		20		X			14 10.000							14 10	14 10	89
8	9H99		WEB		20		X			19 9.000							19 9	19 9	537
4	9H100		WEB		20		X			20 5.000							20 5	20 5	278
4	9H101		WEB		20		X			21 6.000							21 6	21 6	292
2	6H102		WEB		20		X			21 6.000							21 6	21 6	65
6	8H105		TIE BEAM		20		X			17 4.000							17 4	17 4	278
22	4H106		TIE BEAM		20		X			16 0.000							16 0	16 0	235
4	9H107		BEAM		18		X			16 8.000							19 2	19 2	261
5	9H108		BEAM		18		X			17 0.000							19 6	19 6	332
4	6H109		BEAM		20		X			16 8.000							16 8	16 8	100
4	9H110		BEAM		20		X			16 8.000							16 8	16 8	227
5	9H111		BEAM		20		X			17 0.000							17 0	17 0	289

BILL OF REINFORCING STEEL

NO. REQ'D.	MARK NO. SIZE	MARK NO. MARK	LOCATION	EPOXY (E)	SHAPE NO.	STIRRUP (S)	SUBSTR. (X)	VARIES (V)	NO. EACH	DIMENSIONS B FT. IN.	C FT. IN.	D FT. IN.	E FT. IN.	F FT. IN.	H FT. IN.	K FT. IN.	NOMINAL LENGTH FT. IN.	ACTUAL LENGTH FT. IN.	WEIGHT LBS.
6	8H112		TIE BEAM		20		X			17 11.000							17 11	17 11	287
22	4H113		TIE BEAM		20		X			16 7.000							16 7	16 7	244
74	4P4		COLUMN		16		X			3 9.000							12 8	12 8	626
48	4P5		COLUMN		16		X			4 9.000							15 10	15 10	508
5	5U38		BEAM		13	S	X			4 3.000	3 6.000	4 3.000	3 6.000				16 5	16 1	84
24	5U39		BEAM		13	S	X			2 10.000	3 6.000	2 10.000	3 6.000				13 7	13 3	332
2	5U40		BEAM		13	S	X			2 7.875	3 6.000	2 7.875	3 6.000				13 3	12 11	27
1	5U41		BEAM		13	S	X			2 4.875	3 6.000	2 4.875	3 6.000				12 9	12 5	13
4	4U42		BEAM		10	S	X				6.000	4 3.000					5 3	5 1	14
20	5U43		WEB		13	S	X			3 9.000	2 9.000	3 9.000	2 9.000				13 11	13 7	283
58	5U44		TIE BEAM		10	S	X				2 0.500	11 9.000					15 10	15 8	948
8	5U45		BEAM		13	S	X			4 3.000	3 8.000	4 3.000	3 8.000				16 9	16 5	137
22	5U46		BEAM		13	S	X			2 10.000	3 8.000	2 10.000	3 8.000				13 11	13 7	312
2	5U47		BEAM		13	S	X			2 6.000	3 8.000	2 6.000	3 8.000				13 3	12 11	27
1	5U48		BEAM		13	S	X			17.500	3 8.000	17.500	3 8.000				11 2	10 10	11
1	4U60		BEAM		10	S	X				6.000	3 5.250					4 5	4 3	3
1	4U61		BEAM		10	S	X				6.000	3 0.125					4 0	3 10	3
58	9V31		COLUMN		20		X			23 9.000							23 9	23 9	4684
46	8V32		COLUMN		20		X			39 4.000							39 4	39 4	4831
8	W5W40		A.B. WELLS		22		X			12.000	9.125						19 9	19 9	26
			SUPERSTR.																
			END BT NO 5 (E.B.L.)																
14	6F2		WING BRACE		15					14.000	4 6.000	14.000	9.875	9.875	9.875	9.875	6 10	6 5	142
12	6F3		DIAPH.		19					4 3.000	2 7.000						6 10	6 8	120
4	6H114		DIAPH.	E	20					46 6.000							46 6	46 6	279
4	6H115		DIAPH.	E	20					22 10.000							22 10	22 10	137
3	6H116		DIAPH.		20					46 6.000							46 6	46 6	210
3	6H117		DIAPH.		20					43 8.000							43 8	43 8	197
3	6H118		DIAPH.		20					11 0.000							11 0	11 0	50
3	6H119		DIAPH.		20					22 10.000							22 10	22 10	103
21	6H120		DIAPH & BEAM		20					14 5.000							14 5	14 5	455
21	6H121		DIAPH & BEAM		20					5 3.000							5 3	5 3	166
2	4H122		APP. HCH.		20					23 0.000							23 0	23 0	31
1	4H123		APP. HCH.		20					21 8.000							21 8	21 8	14
2	6H124		WING	E	20					10 3.000							10 5	10 5	31
4	6H125		WING		20					10 5.000							10 5	10 5	63
16	6H126		WING		20			V	2	4 0.000							4 0	4 0	
			INCREMENT = 10.375 INCH							10 1.000							10 1	10 1	169
2	6H127			E	20					11 2.000							11 2	11 2	34
29	6H128		WING		20					11 2.000							11 2	11 2	335
2	6T7		WING		25					2 1.000	9 6.375	3 1.750		6 3.125	7 2.250		14 9	14 8	44
4	5J49		BEAM		32	S				4 11.25.	3 5.625	5 1.000		4 11.250	14.750		13 6	13 3	55
4	4U50		BEAM		13	S				2 8.875	3 0.125	3 5.625	2 11.000				12 11	12 7	34
1	4U51		BEAM		14	S				2 11.000	2 8.87.	3 0.125		2 11.000	8.750		8 9	8 6	5
11	5U52		BEAM		32	S				4 9.000	3 5.625	4 10.750		4 9.000	14.250		13 1	12 10	147

STATE MO. | PROJ. NO. | SHEET NO. 346

SHAPE 6 · SHAPE 7 · SHAPE 8 · SHAPE 9 · SHAPE 10 · SHAPE 11 · SHAPE 12 · SHAPE 13 · SHAPE 14 · SHAPE 15 · SHAPE 16 · SHAPE 17 · SHAPE 18 · SHAPE 19 · SHAPE 20 · SHAPE 21 · SHAPE 22 · SHAPE 23 · SHAPE 24 · SHAPE 25 · SHAPE 26 · SHAPE 27 · SHAPE 28 · SHAPE 29 · SHAPE 30 · SHAPE 31 · SHAPE 32 · SHAPE 33 · SHAPE 34 · SHAPE 35 · SHAPE 36

SPOT WELD AASHTO M32 SIZE W5 W... (TYP.)

BENDING DIAGRAMS

STD 20.8 REVISED MAY 1974 OCT. 1991

6d FOR #4 AND #5, 12d FOR #6

90° STIRRUP · 135° STIRRUP

DETAILED AUG. 1993
CHECKED AUG. 1993

STIRRUP HOOK DIMENSIONS

GRADES 40 - 50 - 60 KSI

BAR SIZE	D (IN.)	90° HOOK A OR G	135° HOOK A OR G	135° HOOK APPROX. H
#4	2"	4-1/2"	4-1/2"	3"
#5	2-1/2"	6"	5-1/2"	3-3/4"
#6	4-1/2"	12"	5"	4-1/2"

NOTE: UNLESS OTHERWISE NOTED DIAMETER "D" IS THE SAME FOR ALL BENDS AND HOOKS ON A BAR.

DETAILING DIMENSION · 90° · 180° · 4d OR 2-1/2" MIN.

END HOOK DIMENSIONS

BAR SIZE	D (IN.)	ALL GRADES 180° HOOKS A OR G	180° HOOKS J	90° HOOKS A OR G
#3	2-1/4"	5"	3"	6"
#4	3"	6"	4"	8"
#5	3-3/4"	7"	5"	10"
#6	4-1/2"	8"	6"	12"
#7	5-1/4"	10"	7"	14"
#8	6"	11"	8"	16"
#9	9-1/2"	15"	11-3/4"	19"
#10	10-3/4"	17"	13-1/4"	22"
#11	12"	19"	14-3/4"	2'-0"
#14	18-1/4"	2'-3"	21-3/4"	2'-7"

TWO ADDITIONAL ARE INCLUDED IN THE BAR BILL FOR TESTING.

NOTE: THIS DRAWING IS NOT TO SCALE. FOLLOW DIMENSIONS.

NOTE:
ALL STANDARD HOOKS AND BENDS OTHER THAN 180 DEG. TO BE BENT WITH THE SAME PROCEDURE AS FOR 90 DEG. STD. HOOKS.
HOOKS AND BENDS SHALL BE IN ACCORDANCE WITH THE PROCEDURES AS SHOWN ON THIS SHEET.
E = EPOXY COATED REINFORCEMENT.
S = STIRRUP.
X = BAR IS INCLUDED IN SUBSTRUCTURE QUANTITIES.
V = BAR DIMENSIONS VARY IN EQUAL INCREMENTS BETWEEN DIMENSIONS SHOWN ON THIS LINE AND THE FOLLOWING LINE.
NO. EA. = NUMBER OF BARS OF EACH LENGTH.
NOMINAL LENGTHS ARE BASED ON OUT TO OUT DIMENSIONS SHOWN IN BENDING DIAGRAMS AND ARE LISTED FOR FABRICATORS USE. (NEAREST INCH)
ACTUAL LENGTHS ARE MEASURED ALONG CENTERLINE BAR TO THE NEAREST INCH.
PAYWEIGHTS ARE BASED ON ACTUAL LENGTHS.
FOUR ANGLE OR CHANNEL SPACERS ARE REQUIRED FOR EACH COLUMN SPIRAL. SPACERS ARE TO BE PLACED ON INSIDE OF SPIRALS. LENGTH AND WEIGHT OF COLUMN SPIRALS DO NOT INCLUDE SPLICES OR SPACERS.
REINFORCING STEEL (GRADE 60) = FY 60,000 PSI.

SHEET NO. 49 OF 51.

JACKSON COUNTY

A-6101R1

BILL OF REINFORCING STEEL

NO. REQ'D.	MARK NO. SIZE	MARK	LOCATION	EPOXY (E)	SHAPE NO.	STIRRUP (S)	SUBSTR. (X)	VARIES (V)	NO. EACH	DIMENSIONS B FT. IN.	C FT. IN.	D FT. IN.	E FT. IN.	F FT. IN.	H FT. IN.	K FT. IN.	NOMINAL LENGTH FT. IN.	ACTUAL LENGTH FT. IN.	WEIGHT LBS.
7	4U53		BEAM		13	5				2 9.375	2 10.000	3 5.625	2 9.000				12 7	12 4	58
2	4U54		BEAM		14	5				2 9.000	2 9.375	2 10.000			2 9.000	8.250	8 4	8 3	11
89	6U55		DIAPH.	E	19	5				2 1.000	4 1.000						6 2	6 0	802
4	5U56		DIAPH.	E	10	5					5 7.000	2 8.375					13 10	13 8	57
13	5U57		DIAPH.	E	10	5					5 5.000	2 9.000					13 7	13 5	182
41	5U58		DIAPH.	E	10	5					2 1.000	2 4.000					6 6	6 4	271
53	4U59		APP. HCH.		10	5					17.500	6.000					3 5	3 3	115
4	5V33		BEAM		20					4 11.000							4 11	4 11	21
14	6V34		WING		20		V	2		2 7.000							2 7	2 7	
			INCREMENT =							8 0.000							8 0	8 0	111
			10.875 INCH																
4	6V35		WING		20					8 10.000							8 10	8 10	53
22	6V36		WING		20		V	2		8 2.000							8 2	8 2	
			INCREMENT =							8 6.000							8 6	8 6	275
			0.375 INCH																
			END BT NO 5 (W.B.L.)																
6	6F2		WING BRACE		15					14.000	4 6.000	14.000	9.875	9.875	9.875	9.875	6 10	6 9	61
6	6F3		DIAPH.		19					4 3.000	2 7.000						6 10	6 8	60
3	6H115		DIAPH.	E	20					22 10.000							22 10	22 10	137
3	6H118		DIAPH.		20					11 0.000							11 0	11 0	50
3	6H119		DIAPH.		20					22 10.000							22 10	22 10	103
21	6H120		DIAPH & BEAM		20					14 5.000							14 5	14 5	455
1	4H123		APP. HCH.		20					21 8.000							21 8	21 8	14
4	6H129		DIAPH.	E	20					58 6.000							58 6	58 6	351
3	6H130		DIAPH.		20					44 0.000							44 0	44 0	198
3	6H131		DIAPH.		20					58 6.000							58 6	58 6	264
21	6H132		DIAPH & BEAM		20					17 3.000							17 3	17 3	544
2	4H133		APP. HCH.		20					29 0.000							29 0	29 0	39
2	6H134		WING	E	20					10 5.000							10 5	10 5	31
4	6H135		WING		20					10 5.000							10 5	10 5	63
16	6H136		WING		20		V	2	3	11.000							3 11	3 1	
			INCREMENT =							10 2.000							10 2	10 2	169
			10.750 INCH																
2	6T8		WING		25					2 1.000	9 5.000	3 1.750			6 1.000	7 2.250	14 8	14 7	44
12	5U49		BEAM		32	S				4 11.250	3 5.625	5 1.000			4 11.250	14.750	13 6	13 3	166
10	4U50		BEAM		33	S				2 8.875	3 0.125	3 5.625	2 11.000				12 11	12 7	84
11	5U52		BEAM		32	S				4 9.000	3 5.625	4 10.750			4 9.000	14.250	13 1	12 10	147
7	5U53		BEAM		33	S				2 9.375	2 10.000	3 5.625	2 9.000				12 9	12 5	91
2	4U54		BEAM		14	S				2 9.000	2 9.375	2 10.000			2 9.000	8.250	8 4	8 3	11
105	6U55		DIAPH.	E	19	S				2 1.000	4 1.000						6 2	6 0	946
28	5U57		DIAPH.	E	10	S					5 5.000	2 9.000					13 7	13 5	392
41	5U58		DIAPH.	E	10	S					2 1.000	2 4.000					6 6	6 4	271
66	4U59		APP. HCH.		10	S					17.500	6.000					3 5	3 3	143
4	5V33		BEAM		20					4 11.000							4 11	4 11	21
6	5V37		BEAM		20					5 1.000							5 1	5 1	32
14	6V33		WING		20		V	2		2 7.000							2 7	2 7	
			INCREMENT =							7 11.000							7 11	7 11	110
			10.625 INCH																
4	6V39		WING		20					8 8.000							8 8	8 8	52

BILL OF REINFORCING STEEL

NO. REQ'D.	MARK NO. SIZE	MARK	LOCATION	EPOXY (E)	SHAPE NO.	STIRRUP (S)	SUBSTR. (X)	VARIES (V)	NO. EACH	DIMENSIONS B FT. IN.	C FT. IN.	D FT. IN.	E FT. IN.	F FT. IN.	H FT. IN.	K FT. IN.	NOMINAL LENGTH FT. IN.	ACTUAL LENGTH FT. IN.	WEIGHT LBS.
144	5C1		BARRIER CURB	E	20					8 10.000							8 10	8 10	1327
4	5C2		BARRIER CURB	E	20					9 4.000							9 4	9 4	39
2	5C3		BARRIER CURB	E	20					6 3.000							6 3	6 3	13
2	5C4		BARRIER CURB	E	20					10 8.000							10 8	10 8	22
2	5C5		BARRIER CURB	E	20					12 8.000							12 8	12 8	26
2250	5R1		BARRIER CURB	E	19	S				2 6.000	3.500						2 10	2 8	6258
2194	5R2		BARRIER CURB	E	15	S				2 6.125	3.500						2 10	2 9	6293
1054	5R3		BARRIER CURB	E	19	S				17.000	6.000						23	22	2015
1054	5R4		BARRIER CURB	E	27	S					6.000	11.000	7.000	12.000	9.000	6.250	3 0	2 10	3115
26	5R5		BARRIER CURB	E	19	S				18.500	6.000						2 1	23	52
26	5R6		BARRIER CURB	E	27	S				12.000	9.750	10.625	6.000		6.125	8.750	3 2	3 0	81
4	5R7		BARRIER CURB	E	19	S				16.000	6.000						22	21	7
4	5R8		BARRIER CURB	E	27	S				12.000	9.750	7.750	6.000		6.625	6.250	3 0	2 10	12
12	5R9		BARRIER CURB	E	10	S					2 8.500	7.500					6 1	5 10	73
48	5R10		BARRIER CURB	E	20					5 0.000							5 0	5 0	250
8	5R11		BARRIER CURB	E	19	S				2 3.500	3.500						2 7	2 6	21
10	5R12		BARRIER CURB	E	20					8 6.000							8 6	8 6	89
2	5R13		BARRIER CURB	E	20					9 5.000							9 5	9 5	20
2	5R14		BARRIER CURB	E	20					11 3.000							11 3	11 3	23
26	5R15		BARRIER CURB	E	19	S				2 2.500	6.000						2 9	2 7	70
26	5R16		BARRIER CURB	E	27	S					6.000	11.000	17.750		9.000	6.250	2 11	2 10	77
4	5R17		BARRIER CURB	E	27	S					6.000	7.750	17.750		6.250	4.625	2 8	2 7	11
4	5R18		BARRIER CURB	E	19	S				2 0.000	6.000						2 6	2 5	10
12	5R19		BARRIER CURB	E	10	S					2 0.000	7.500					4 6	4 5	55
10	5R20		BARRIER CURB	E	20					9 0.000							9 0	9 0	94
2	5R21		BARRIER CURB	E	20					9 10.000							9 10	9 10	21
84	5R22		BARRIER CURB	E	20					35 1.000							35 1	35 1	3074
282	5R23		BARRIER CURB	E	20					9 9.000							9 9	9 9	2868
168	5R24		BARRIER CURB	E	20					35 11.000							35 11	35 11	6293
63	5R25		BARRIER CURB	E	20					34 6.000							34 6	34 6	2267
7	5R26		BARRIER CURB	E	20					5 9.000							5 9	5 9	42
7	5R27		BARRIER CURB	E	20					12 5.000							12 5	12 5	91
7	5R28		BARRIER CURB	E	20					10 5.000							10 5	10 5	76
21	5R29		BARRIER CURB	E	20					35 6.000							35 6	35 6	778
			CAST-IN-PLACE CONVENTIONAL FORMS OR STAY-IN-PLACE FORMS																
2466	6S1		SLAB	E	20					22 5.000							22 5	22 5	8 3030
1233	6S2		SLAB	E	20					34 7.000							34 7	34 7	6 4047
1959	6S3		SLAB	E	20					26 6.000							26 6	26 6	7 7974
1959	6S4		SLAB	E	20					46 6.000							46 6	46 6	13 6822
1638	5S5		SLAB	E	20					39 0.000							39 0	39 0	6 6629
460	6S6		SLAB	E	20					60 0.000							60 0	60 0	4 1455
462	6S7		SLAB	E	20					13 4.000							13 4	13 4	9252
230	6S8		SLAB	E	20					60 0.000							60 0	60 0	2 0728
230	6S9		SLAB	E	20					20 1.000							20 1	20 1	6938
2016	6S10		SLAB	E	20					38 9.000							38 9	38 9	11 7336
1452	6S11		SLAB	E	20					21 10.000							21 10	21 10	4 7616
726	6S12		SLAB	E	20					34 0.000							34 0	34 0	3 7075
4344	4S13		SLAB HAUNCH	E	10					6.000	7.000	7.000	6.000				2 9	2 5	7011

TWO ADDITIONAL #5-R23 & #6-S7 ARE INCLUDED IN THE BAR BILL FOR TESTING.

STD 90.8 REVISED MAY 1974 OCT. 1991

DETAILED AUG. 1993
CHECKED AUG. 1993

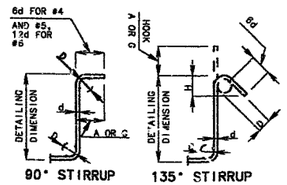

STIRRUP HOOK DIMENSIONS GRADES 40 – 50 – 60 KSI					
BAR SIZE	D (IN.)	90° HOOK A OR G	135° HOOK A OR G	135° HOOK APPROX. H	
#4	2"	4-1/2"	4-1/2"	3"	
#5	2-1/2"	6"	5-1/2"	3-3/4"	
#6	4-1/2"	12"	8"	4-1/2"	

NOTE: UNLESS OTHERWISE NOTED DIAMETER "D" IS THE SAME FOR ALL BENDS AND HOOKS ON A BAR.

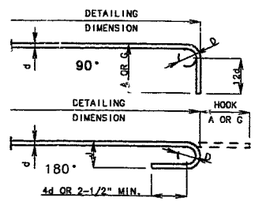

NOTE: THIS DRAWING IS NOT TO SCALE. FOLLOW DIMENSIONS.

END HOOK DIMENSIONS					
BAR SIZE	D (IN.)	ALL GRADES 180° HOOKS A OR G	J	90° HOOKS A OR G	
#3	2-1/4"	5"	3"	8"	
#4	3"	6"	4"	8"	
#5	3-3/4"	7"	5"	10"	
#6	4-1/2"	8"	6"	12"	
#7	5-1/4"	10"	7"	14"	
#8	6"	11"	8"	16"	
#9	9-1/2"	15"	11-3/4"	19"	
#10	10-3/4"	17"	13-1/2"	22"	
#11	12"	19"	14-3/4"	2'-0"	
#14	18-1/4"	2'-3"	21-3/4"	2'-7"	

NOTE:
ALL STANDARD HOOKS AND BENDS OTHER THAN 180 DEG. TO BE BENT WITH THE SAME PROCEDURE AS FOR 90 DEG. STD. HOOKS.
HOOKS AND BENDS SHALL BE IN ACCORDANCE WITH THE PROCEDURES AS SHOWN ON THIS SHEET.
E = EPOXY COATED REINFORCEMENT.
S = STIRRUP.
X = BAR IS INCLUDED IN SUBSTRUCTURE QUANTITIES.
V = BAR DIMENSIONS VARY IN EQUAL INCREMENTS BETWEEN DIMENSIONS SHOWN ON THIS LINE AND THE FOLLOWING LINE.
NO. EA. = NUMBER OF BARS OF EACH LENGTH.
NOMINAL LENGTHS ARE BASED ON OUT TO OUT DIMENSIONS SHOWN IN BENDING DIAGRAMS AND ARE LISTED FOR FABRICATORS USE. (NEAREST INCH)
ACTUAL LENGTHS ARE MEASURED ALONG CENTERLINE BAR TO THE NEAREST INCH.
PAYWEIGHTS ARE BASED ON ACTUAL LENGTHS.
FOUR ANGLE OR CHANNEL SPACERS ARE REQUIRED FOR EACH COLUMN SPIRAL. SPACERS ARE TO BE PLACED ON INSIDE OF SPIRALS. LENGTH AND WEIGHT OF COLUMN SPIRALS DO NOT INCLUDE SPLICES OR SPACERS.
REINFORCING STEEL (GRADE 60) = FY 60,000 PSI.

⚠ Revised 5/26/94

STATE | PROJ. NO. | SHEET NO.
MO.

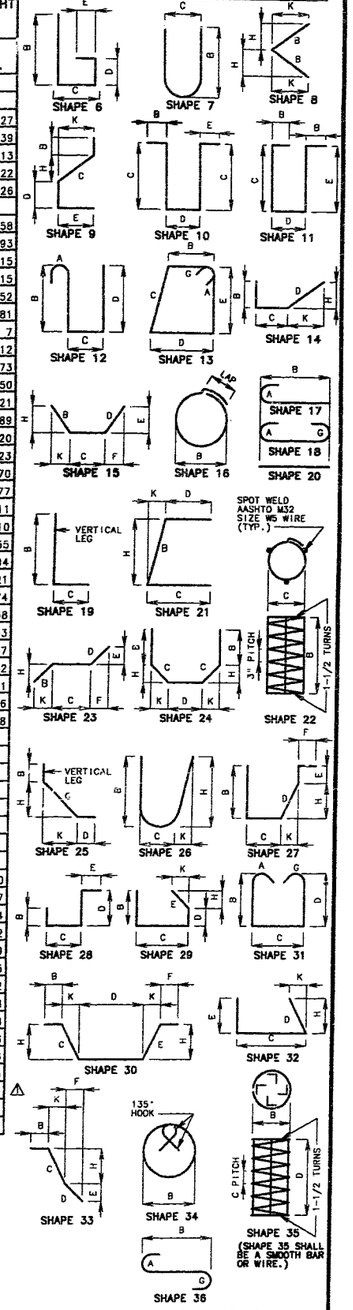

BENDING DIAGRAMS

SHEET NO. 50 OF 51.

JACKSON COUNTY

A-610R1

STATE	PROJ. NO.	SHEET NO.
MO.		318

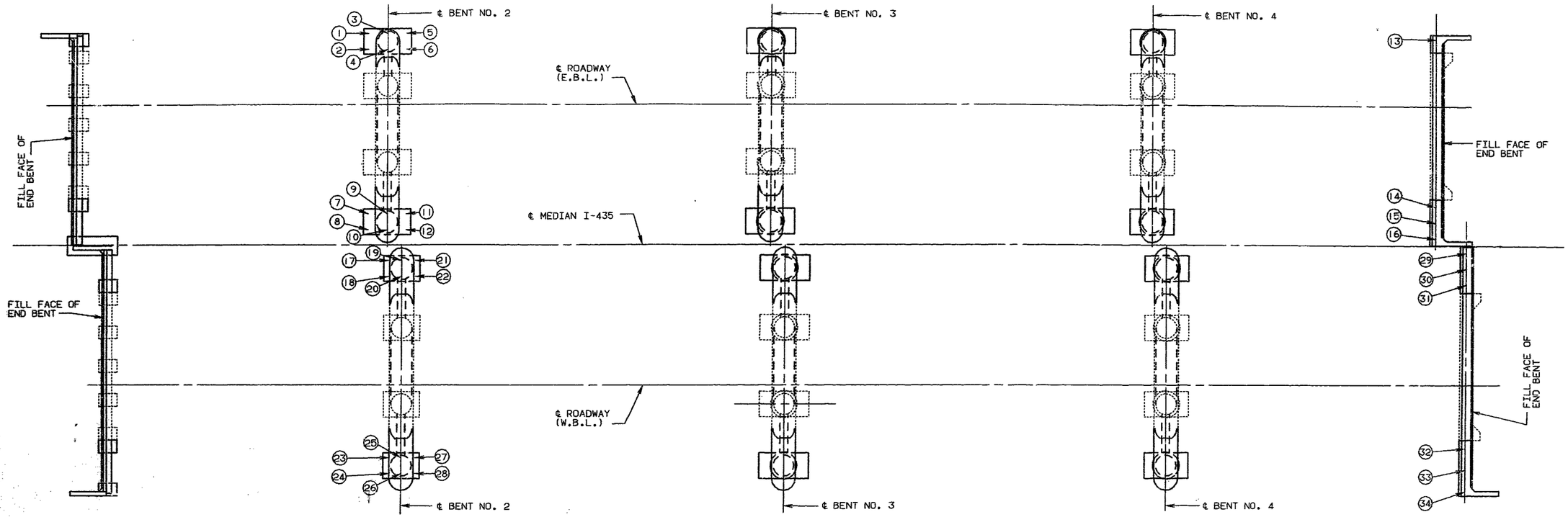

PART PLAN SHOWING PILE NUMBERING FOR RECORDING "AS BUILT PILE" DATA

"AS BUILT PILE" DATA			
PILE NO.	LENGTH IN PLACE (FT.)	COMPUTED BEARING (TONS)	REMARKS
			INT. BENT NO. 2 (E.B.L.)
1			
2			
3			
4			
5			
6			
7			
8			
9			
10			
11			
12			

"AS BUILT PILE" DATA			
PILE NO.	LENGTH IN PLACE (FT.)	COMPUTED BEARING (TONS)	REMARKS
			END BENT NO. 5 (E.B.L.)
13			
14			
15			
16			INT. BENT NO. 2 (W.B.L.)
17			
18			
19			
20			
21			
22			
23			
24			
25			
26			

"AS BUILT PILE" DATA			
PILE NO.	LENGTH IN PLACE (FT.)	COMPUTED BEARING (TONS)	REMARKS
27			
28			
			END BENT NO. 5 (W.B.L.)
29			
30			
31			
32			
33			
34			

END BENT NO. 5 (W.B.L.)

NOTE: INDICATE IN REMARK COLUMN:
A. IF PILING WERE DRIVEN TO PRACTICAL REFUSAL.
B. PILE BATTER IF OTHER THAN SHOWN ON BENT DETAIL SHEET.
C. TYPE OF PILING USED.

NOTE: THIS SHEET TO BE COMPLETED BY MHTD CONSTRUCTION PERSONNEL.

MISC. PILES IN PLA
PILES IN PLACE
MAY 1992
REVISED

DETAILED AUG. 1993
CHECKED AUG. 1993

NOTE: THIS DRAWING IS NOT TO SCALE. FOLLOW DIMENSIONS.

SHEET NO. 51 OF 51.

JACKSON COUNTY

A-610R1

MISSOURI HIGHWAY AND TRANSPORTATION COMMISSION

STATE	PROJ. NO.	SHEET NO.
MO.	Job#J4I0807 L F.A.I-435-1(251)	298
SEC./SUR. 33 TWP. 48N RGE. 38W		

FINAL PLANS

WIDEN AND REDECK EXISTING SPANS
(112'–145'–145'–112') CONT.COMP. PLATE GDR. SPANS
– 4.0 % GRADE

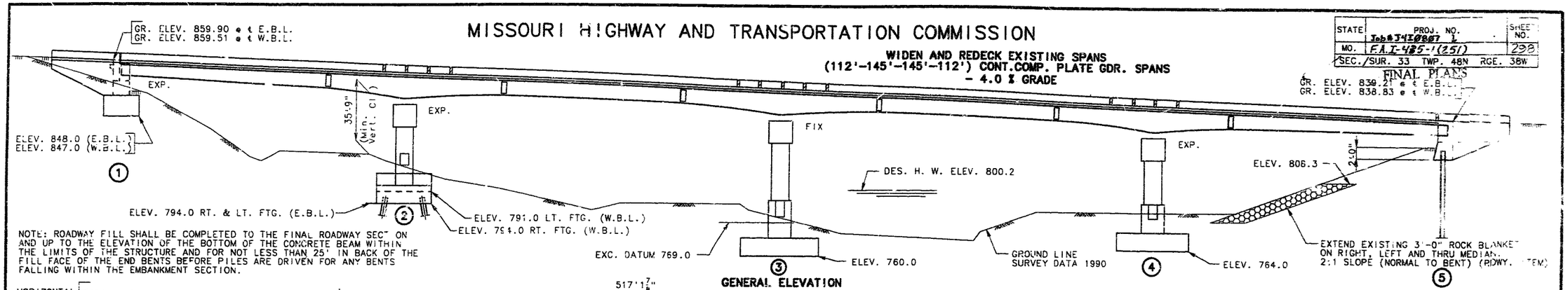

NOTE: ROADWAY FILL SHALL BE COMPLETED TO THE FINAL ROADWAY SECTION AND UP TO THE ELEVATION OF THE BOTTOM OF THE CONCRETE BEAM WITHIN THE LIMITS OF THE STRUCTURE AND FOR NOT LESS THAN 25' IN BACK OF THE FILL FACE OF THE END BENTS BEFORE PILES ARE DRIVEN FOR ANY BENTS FALLING WITHIN THE EMBANKMENT SECTION.

GENERAL ELEVATION

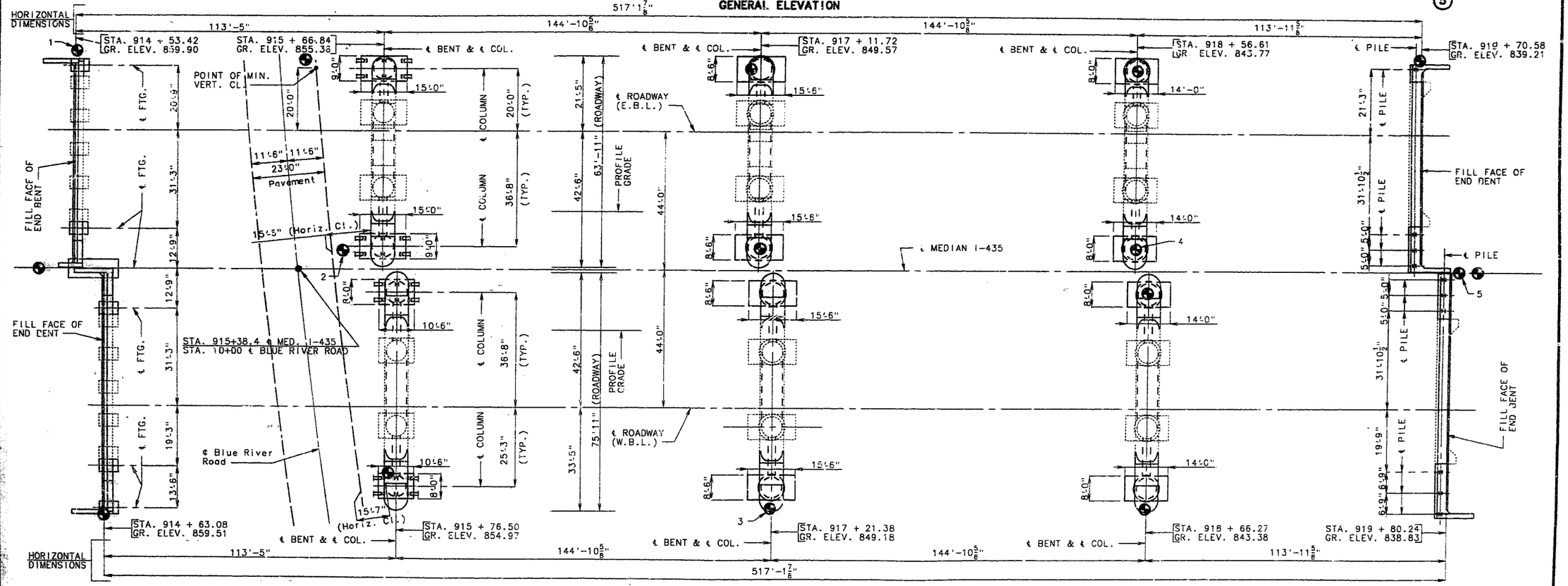

PLAN

NOTE AND DISCLAIMER REGARDING BORING LOG DATA

THE LOCATIONS OF ALL SUBSURFACE BORING FOR THIS STRUCTURE ARE SHOWN ON THE BRIDGE PLAN SHEET FOR THIS STRUCTURE. BORING DATA FOR THE NUMBERED LOCATIONS IS SHOWN ON SHEET NO. 2. THE BORING DATA FOR ALL LOCATIONS INDICATED, AS WELL AS ANY OTHER BORING LOGS OR OTHER FACTUAL RECORDS OF SUBSURFACE DATA AND INVESTIGATIONS PERFORMED BY THE DEPARTMENT FOR THE DESIGN OF THE PROJECT, IS AVAILABLE FROM THE DISTRICT MATERIALS ENGINEER UPON WRITTEN REQUEST AS OUTLINED IN THE PROJECT SPECIAL PROVISIONS. NO GREATER SIGNIFICANCE OR WEIGHT SHOULD BE GIVEN TO THE BORING DATA DEPICTED ON THE PLAN SHEETS THAN TO SUBSURFACE DATA AVAILABLE FROM THE DISTRICT OR ELSEWHERE.

THE COMMISSION DOES NOT REPRESENT OR WARRANT THAT ANY SUCH BORING DATA ACCURATELY DEPICTS THE CONDITIONS TO BE ENCOUNTERED IN CONSTRUCTING THIS PROJECT. A CONTRACTOR ASSUMES ALL RISKS IT MAY ENCOUNTER IN BASING ITS BID PRICES, TIME OR SCHEDULE OF PERFORMANCE ON THE BORING DATA DEPICTED HERE OR THOSE AVAILABLE FROM THE DISTRICT, OR ON ANY OTHER DOCUMENTATION NOT EXPRESSLY WARRANTED, WHICH THE CONTRACTOR MAY OBTAIN FROM THE COMMISSION.

NOTE: THIS DRAWING IS NOT TO SCALE. FOLLOW DIMENSIONS.

DESIGNED FEB. 1993
DETAILED AUG. 1993
CHECKED AUG. 1993

B.M. ELEV. 861.67 P.-K. NAIL IN BR. PARAPET
℄ N.E. COR. W.B.L. BR. A-610R1
77.5'± Rt. ℄ Med. Sta. 914+60±

⊕ INDICATES LOCATION OF BORINGS.

NOTE: FOR GENERAL NOTES, ESTIMATED QUANTITIES, HYDROLOGIC DATA AND PILE AND FOOTING DATA SEE SHEET NO. 2.

SHEET NO. 1 OF 51.

BRIDGE OVER BLUE RIVER & BLUE RIVER ROAD

STATE ROAD: INTERSTATE RTE. I-435
ABOUT 1.5 MILES WEST OF RTE. 71
PROJECT NO. **STA. 914+63.08**
JOB NO. J410807 **RTE. I-435**

JACKSON COUNTY

DATE 2/28/94

STD.
STD. 706.35
A-610R1

STATE	PROJ. NO.	SHEET NO.
MO.	Job # J6I0887 F.A.I.-435-1(251)	55

FINAL PLANS

GENERAL NOTES:

DESIGN SPECIFICATIONS: A.A.S.H.T.O.-1992
LOAD FACTOR DESIGN.
SEISMIC PERFORMANCE CATEGORY A.

DESIGN LOADING:
HS20-44 MODIFIED 24,000# TANDEM AXLE
NO FUTURE WEARING SURFACE
EARTH 120#/CU. FT., EQUIVALENT FLUID PRESSURE 45#/CU. FT.
FATIGUE STRESS - CASE I.

DESIGN UNIT STRESSES:
CLASS B CONCRETE (SUBSTRUCTURE) F'C=3,000 PSI.
CLASS B1 CONCRETE (SAFETY BARRIER CURB) F'C=4,000 PSI.
CLASS B2 CONCRETE (SUPERSTRUCTURE EXCEPT SAFETY BARRIER CURB) F'C=4,000 PSI.
REINFORCING STEEL (GRADE 60) FY=60,000 PSI.
STRUCTURAL CARBON STEEL FY=36,000 PSI.
STEEL PILE FB=9,000PSI.

STRUCTURAL STEEL:
FIELD CONNECTIONS, HIGH STRENGTH BOLTS 3/4"Ø, HOLES 13/16"Ø, EXCEPT AS NOTED.
HIGH STRENGTH BOLTS, NUTS AND WASHERS WILL BE SAMPLED FOR QUALITY ASSURANCE AS SPECIFIED IN STD. SPEC. 106 AND FIELD SECTION (F5-712).

REINFORCING STEEL:
MINIMUM CLEARANCE TO REINFORCING STEEL SHALL BE 1 1/2", UNLESS OTHERWISE SHOWN.
ALL REINFORCING BARS IN TOPS OF SUBSTRUCTURE BEAMS OR CAPS SHALL BE SPACED TO CLEAR ANCHOR BOLTS FOR BEARINGS BY AT LEAST 1/2".
BARS BONDED IN OLD CONCRETE NOT REMOVED SHALL BE CLEANLY STRIPPED AND EMBEDDED INTO NEW CONCRETE WHERE POSSIBLE. IF LENGTH IS AVAILABLE, OLD BARS SHALL EXTEND INTO NEW CONCRETE AT LEAST 40 DIAMETERS FOR SMOOTH BARS AND 30 DIAMETERS FOR DEFORMED BARS, UNLESS OTHERWISE NOTED.

PAINT:
PAINT NEW STRUCTURAL STEEL SYSTEM F SHOP COATS (GRAY) IN ACCORDANCE WITH SPECIAL PROVISIONS. NO FIELD PAINT EXCEPT FOR TOUCH UP.

AREAS TO BE ENCASED IN END BENT CONCRETE SHALL BE HAND CLEANED OF LOOSE RUST AND SCALE BEFORE CONCRETE IS POURED AND PAINTED WITH 1 COAT OF CALCIUM SULFONATE PRIMER. COST TO BE INCLUDED IN OTHER ITEMS.

JOINT FILLER:
ALL JOINT FILLER SHALL MEET THE REQUIREMENTS OF STD. SPEC. 1057.2.4, EXCEPT AS NOTED.

NOTE: OUTLINE OF OLD WORK IS INDICATED BY LIGHT DASHED LINES. HEAVY LINES INDICATE NEW WORK.
TRAFFIC OVER STRUCTURE TO BE MAINTAINED DURING CONSTRUCTION, SEE SHEET NO. 3.
CONTRACTOR SHALL VERIFY ALL DIMENSIONS IN FIELD BEFORE ORDERING NEW STEEL.

THE * DIAMETER RESIN ANCHOR SYSTEMS SHALL HAVE A MINIMUM ULTIMATE PULLOUT STRENGTH OF ** LBS. IN CONCRETE WITH FC'= 4000 PSI, SEE SPECIAL PROVISIONS.

* BAR SIZE	** PULLOUT
5/8"	15,500
3/4"	20,400
1"	33,600

FINAL QUANTITIES

ITEM		SUBSTR.	SUPERSTR.	TOTAL
PARTIAL REMOVAL OF SUBSTRUCTURE CONCRETE	LUMP SUM			1
REMOVAL OF EXISTING BRIDGE DECK	SQ. FT.		48237	48237
CLASS 1 EXCAVATION	CU. YD.	1462.5		1462.5
CLASS 2 EXCAVATION	CU. YD.	331.0		331.0
STRUCTURAL STEEL PILES (10")	LIN. FT.	652		652
STRUCTURAL STEEL PILES (12")	LIN. FT.	469		469
PRE-BORE FOR PILING	LIN. FT.	294		294
PILE POINT REINFORCEMENT	EACH	10		10
CLASS B CONCRETE (SUBSTR.)	CU. YD.	992		992
SLAB ON STEEL	SQ. YD.		8339	8339
SAFETY BARRIER CURB	LIN. FT.		2133	2133
STRIP SEAL EXPANSION DEVICE	LIN. FT.		140	140
REINFORCING STEEL (BRIDGES)	LB.	121740		121740
REINFORCING STEEL (EPOXY COATED)	LB.	2240		2240
FABRICATED STRUCTURAL CARBON STEEL (PLATE GIRDER)	LB.		82735	82735
SLAB DRAINS	EACH		120	120
EXISTING DIAPHRAGM CONNECTIONS TO FLANGES	LUMP SUM			1
Contingent Item				
50501 Modify Fabricated Girders	F.A.		6331.53	6331.53
50502 Epoxy Reinf. steel, Slab	LB.		7010	7010
50503 Expansion Device Repair	L.S.			1
50504 Modify Expansion Plates	L.S.			1
50505 Expansion Joint Maintenance	L.S.			1
50506 Crevice Concrete	C.Y.	0.9		0.9
50508 Foundation Test Holes	L.F.	64		64
50509 Median Expansion Joint Repair	L.S.		1	1
50507 Class I Excavation +25%	C.Y.	1		1
50510 Plate Girder Modification	L.S.		1	1

Note: Conc. above upper const. joint in bk. wall @ Abut. #1 (E.&W.B.L.) is included with Cl. B (substruct.) quantities.
All conc. above lower const. joint in Abut #5 (E.&W.B.L.) is included with superstruct. quan.
All reinf. in Abut. #1 (E.&W.B.L.) is included with substruct. quantities.
All reinf. in Abut. #5 (E.&W.B.L.) is included with superstruct quantities.
* Saftey Barr. Cb. shall be slip-form-option.

ESTIMATED QUANTITIES FOR ALTERNATE SLABS

TYPE OF SLABS	SLAB ON STEEL		
	REINF. (LBS.)		CONC. (CU. YDS.)
	EPOXY	PLAIN	
CAST-IN-PLACE CONVENTIONAL FORMS 719830 ⚠	712820	5910	2112.1
~~STAY IN PLACE FORMS~~ ***	~~712820~~	~~5910~~	~~1984.8~~ **

NOTE: THE TABLE OF ESTIMATED QUANTITIES FOR ALTERNATE SLABS REPRESENTS THE QUANTITIES USED BY THE STATE IN PREPARING THE COST ESTIMATE FOR CONCRETE SLABS. VARIATIONS MAY BE ENCOUNTERED IN THESE ESTIMATED QUANTITIES BUT THESE VARIATIONS CANNOT BE USED FOR AN ADJUSTMENT IN THE CONTRACT UNIT PRICE PER SQUARE YARD OF ALTERNATE SLAB USED.
SEE SPECIAL PROVISIONS FOR ALTERNATE METHODS OF FORMING SLABS.
~~** DOES NOT INCLUDE CONCRETE REQUIRED TO FILL CORRUGATION OF S.I.P. FORMS.~~
~~*** DOES NOT INCLUDE REINFORCING BARS USED AS BAR SUPPORTS.~~

HYDROLOGIC DATA

DRAINAGE AREA	= 106.7 SQ. MI. (LT. HILLY)
DESIGN DISCHARGE	= 32,000 CFS (FEMA CURVES)
DESIGN HIGH WATER ELEVATION	= 800.2 (100 YEARS)
ESTIMATED BACKWATER	= 0.12 (FT.)

PILE & FOOTING DATA (E.B.L.)

	BENT NO.	1	2	3	4	5
BEARING PILE	PILE TYPE AND SIZE		HP12X53			HP10X42
	NUMBER		12			4
	APPROXIMATE LENGTH FT.		①			~~65~~ ~~68~~
	DESIGN BEARING TONS		62			54
	HAMMER ENERGY REQ'D FT.-LBS.		14,600			11,800
SPREAD FOOTING	FOUNDATION MATERIAL	ROCK		SHALE		
	DESIGN BEARING TONS/SQ. FT.	5.5		6.0	6.0	

Added ⚠2

MINIMUM ENERGY REQUIREMENT OF HAMMER IS BASED ON PLAN LENGTH AND DESIGN BEARING VALUE OF PILES.
ALL PILES SHALL BE DRIVEN TO PRACTICAL REFUSAL.
MANUFACTURED PILE POINT REINFORCEMENT SHALL BE USED ON ALL PILES IN BENT 5. SEE SPECIAL PROVISION.

① ~~24'-10"~~ 24'-11" LEFT FOOTING
[18"] RIGHT FOOTING
~~17'-10"~~ 17'-11" ⚠2

PILE & FOOTING DATA (W.B.L.)

	BENT NO.	1	2	3	4	5
BEARING PILE	PILE TYPE AND SIZE		HP12X53			HP10X42
	NUMBER		12			6
	APPROXIMATE LENGTH FT.		68			67
	DESIGN BEARING TONS		69			51
	HAMMER ENERGY REQ'D FT.-LBS.		16,200			11,100
SPREAD FOOTING	FOUNDATION MATERIAL	ROCK		SHALE		
	DESIGN BEARING TONS/SQ. FT.	5.5		6.0	6.0	

Added ⚠2

MINIMUM ENERGY REQUIREMENT OF HAMMER IS BASED ON PLAN LENGTH AND DESIGN BEARING VALUE OF PILES.
ALL PILES SHALL BE DRIVEN TO PRACTICAL REFUSAL.
MANUFACTURED PILE POINT REINFORCEMENT SHALL BE USED ON ALL PILES IN BENT 5. SEE SPECIAL PROVISION.

340

⚠ Revised 5/26/94 ⚠ Revised 7/1/94

DETAILED JUNE 1993
CHECKED AUG. 1993

NOTE: THIS DRAWING IS NOT TO SCALE. FOLLOW DIMENSIONS.

STATE	PROJ. NO. Job# 9418097	SHEET NO.
MO.	F.A.I.-435-1(251)	

FINAL PLANS**FINAL PLANS**

① = 4" FILL FACE
① = 6" FRONT FACE
② = 6-#6-D1 @ 8" CTS. FILL FACE
② = 4-#6-D1 @ 12" CTS. FRONT FACE
③ = 3"
④ = 6-#6-D1 @ 6" CTS. FILL FACE
④ = 4-#6-D1 @ 10" CTS. FRONT FACE

NOTE: TOP OF BACKWALL AND EXPANSION DEVICE FOR END BENT NO. 1 SHALL CONFORM TO THE CROWN OF ROADWAY SLAB. BACKWALL ABOVE UPPER CONSTRUCTION JOINT SHALL NOT BE POURED UNTIL THE SUPERSTRUCTURE SLAB HAS BEEN POURED IN THE ADJACENT SPAN.

FIELD BENDING SHALL BE REQUIRD FOR #6-F-BARS WHEN NECESSARY TO CONFORM TO SLOPE OF WING.

FOR DETAILS OF RESIN ANCHOR SYSTEMS SEE SHEET NO. 22.

FOR DETAIL OF ANCHOR BOLT WELLS SEE SHEET NO. 32.

FOR DETAILS AND REINFORCEMENT OF SAFETY BARRIER CURB SEE SHEETS NO. 40, 42, 43.

FOR SUBSTRUCTURE QUANITY TABLE, SECTION A-A, B-B AND ELEVATION OF WINGS SEE SHEET NO. 6.

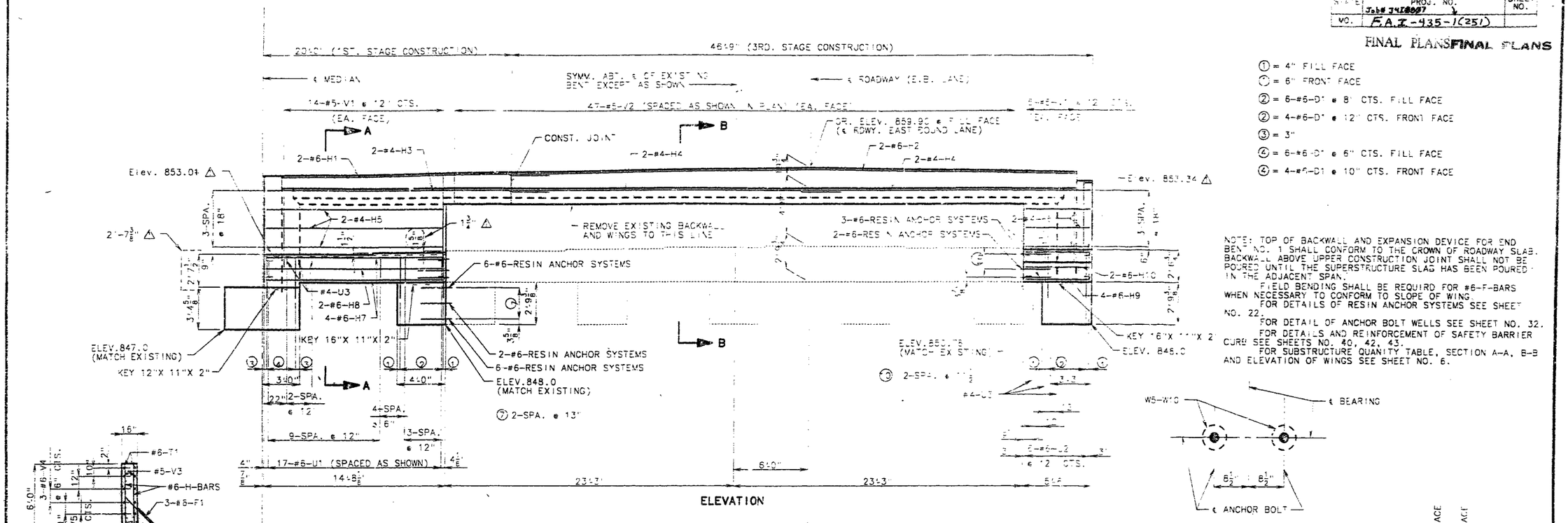

341

REVISED:

△ Revised 5/19/94

DETAILED MAY 1993
CHECKED JUNE 1993

NOTE: THIS DRAWING IS NOT TO SCALE. FOLLOW DIMENSIONS.

SHEET NO. 5 OF 81 SHEETS

JACKSON COUNTY

A-610R1

STATE	PROJ. NO.	SHEET NO.
MO.	J4I0807	303

FINAL PLANS

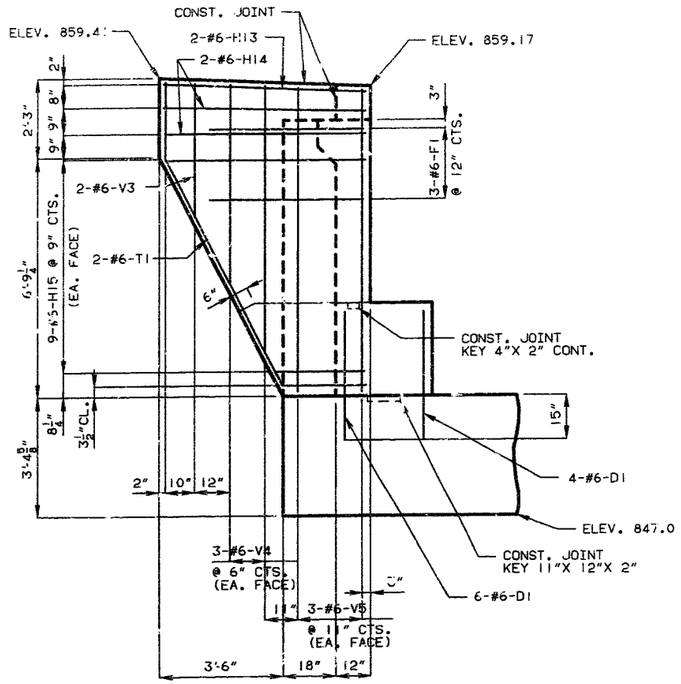

ELEVATION A-A

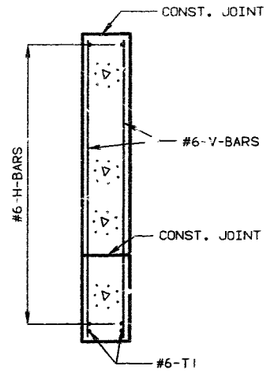

SECTION THRU WING A-A

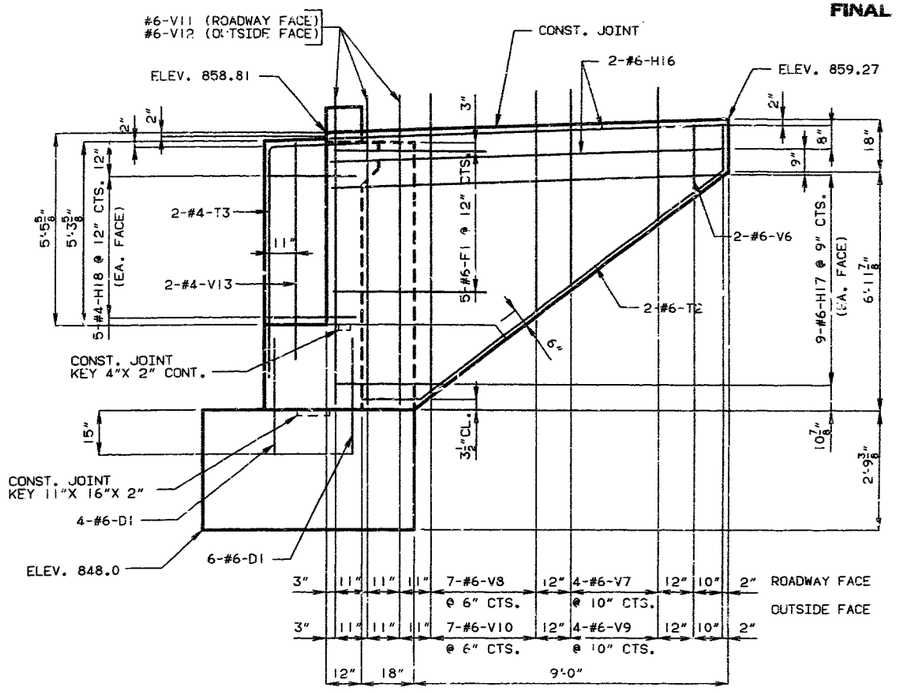

ELEVATION B-B

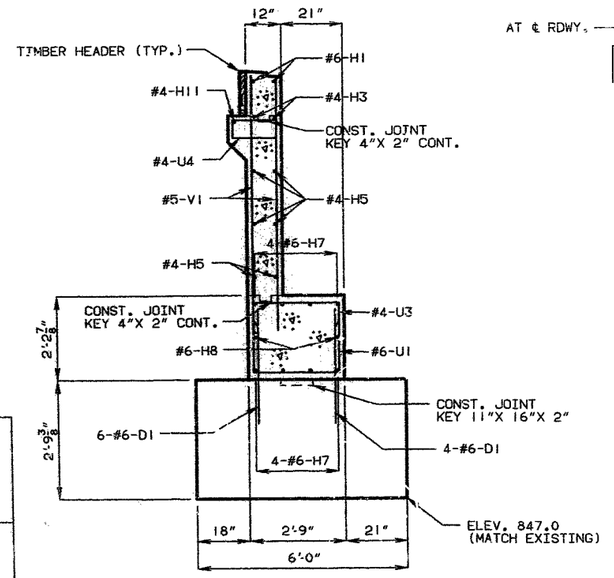

SECTION A-A

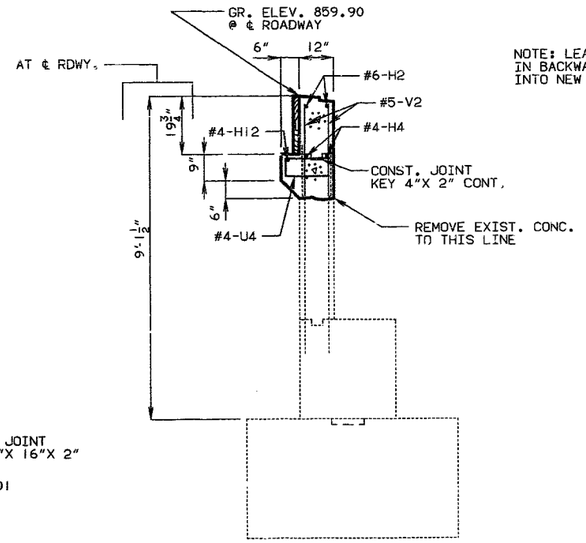

SECTION B-B

NOTE: LEAVE EXISTING V-BARS IN BACKWALL EXTEND 2'-4" INTO NEW CONCRETE.

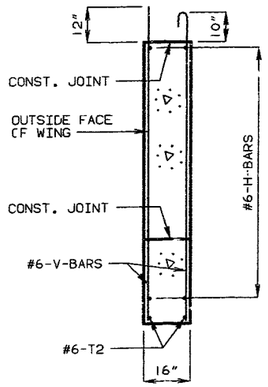

SECTION THRU WING B-B

DETAILS OF END BENT NO. 1
(EAST BOUND LANE)

SUBSTRUCTURE QUANTITY TABLE FOR BENT NO. 1		
ITEM		QUANTITY
CLASS 1 EXCAVATION	CU. YDS.	56.0
CLASS B CONCRETE (SUBSTR.)	CU. YDS.	37.9
REINFORCING STEEL (BRIDGES)	LB.	2420
REINFORCING STEEL (EPOXY COATED)	LB.	520
FOUNDATION TEST HOLES	LIN. FT.	12

NOTE: THESE QUANTITIES ARE INCLUDED IN THE ESTIMATED QUANTITIES TABLE ON SHEET NO. 2.

NOTE: THE AREA EXPOSED BY THE REMOVAL OF CONCRETE AND NOT COVERED WITH NEW CONCRETE SHALL BE COATED WITH AN APPROVED BITUMINOUS PAINT. FOR DETAILS OF TIMBER HEADER SEE SHEET NO. 43.

328 342

REVISED

DETAILED MAY 1993
CHECKED JUNE 1993

NOTE: THIS DRAWING IS NOT TO SCALE. FOLLOW DIMENSIONS.

JACKSON COUNTY A-5101R1

STATE	PROJ. NO.	SHEET NO.
MO.	Job # J4I0807 F.A.I. -435-1(25D)	

FINAL PLANS FINAL PLANS

NOTE: TOP OF BACKWALL AND EXPANSION DEVICE FOR END BENT NO. 1 SHALL CONFORM TO THE CROWN OF ROADWAY SLAB. BACKWALL ABOVE UPPER CONSTRUCTION JOINT SHALL NOT BE POURED UNTIL THE SUPERSTRUCTURE SLAB HAS BEEN POURED IN THE ADJACENT SPAN.

FIELD BENDING SHALL BE REQUIRD FOR #6-F-BARS WHEN NECESSARY TO CONFORM TO SLOPE OF WING.

FOR DETAIL OF RESIN ANCHOR SYSTEMS SEE SHEET NO. 22.

FOR DETAILS OF ANCHOR BOLT WELLS SEE SHEET NO. 32.

FOR DETAILS AND REINFORCEMENT OF SAFETY BARRIER CURB SEE SHEETS NO. 41, 42 & 43.

FOR SUBSTRUCTURE QUAINTY TABLE, SECTIONS A-A, B-B AND ELEVATION OF WINGS SEE SHEET NO. 8.

① = 4" FILL FACE
① = 6" FRONT FACE
② = 6-#3-D1 @ 8" CTS. FILL FACE
② = 4-#6-D1 @ 12" CTS. FRONT FACE
③ = 3"
④ = 6-#6-D1 @ 6" CTS. FILL FACE
④ = 4-#6-D1 @ 10" CTS. FRONT FACE

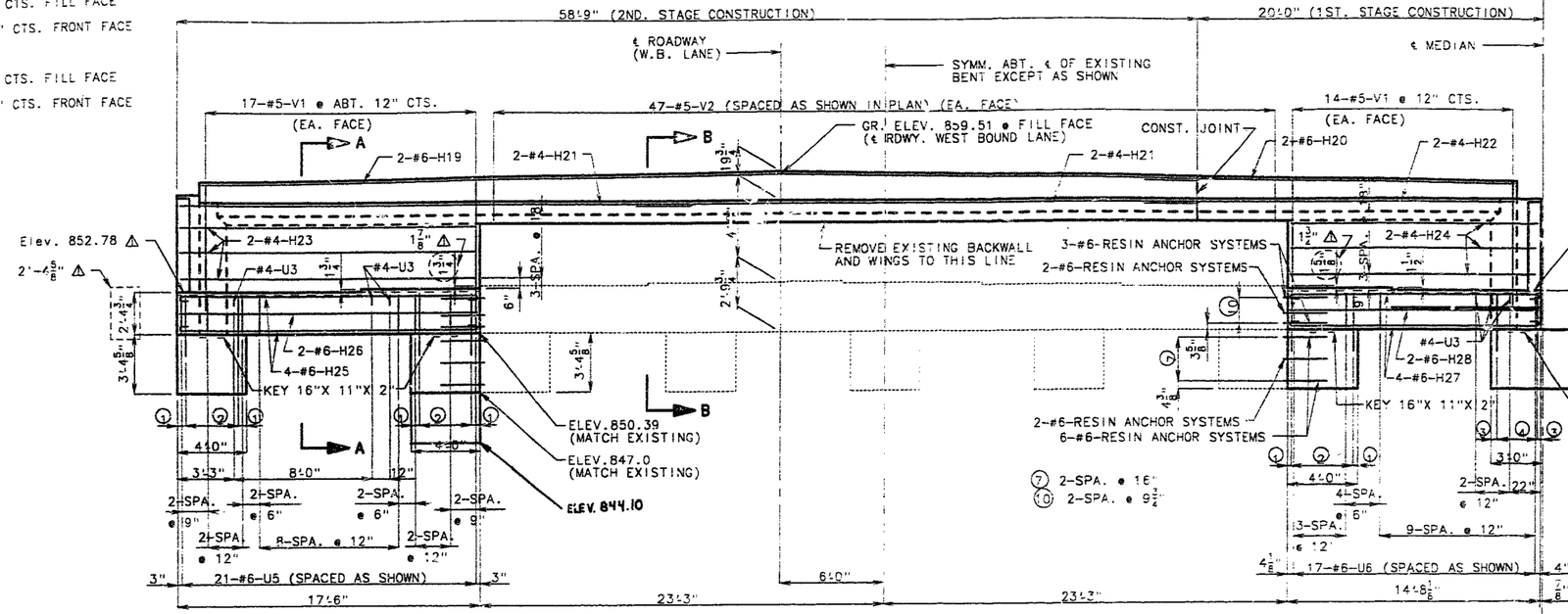

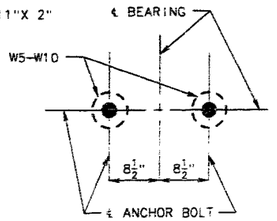

PLAN OF ANCHOR BOLTS

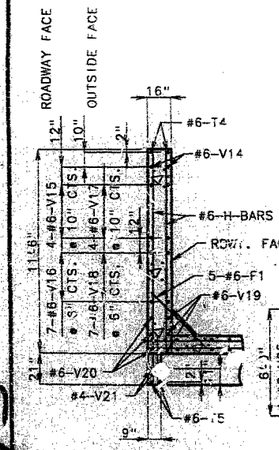

SECTION THRU WING

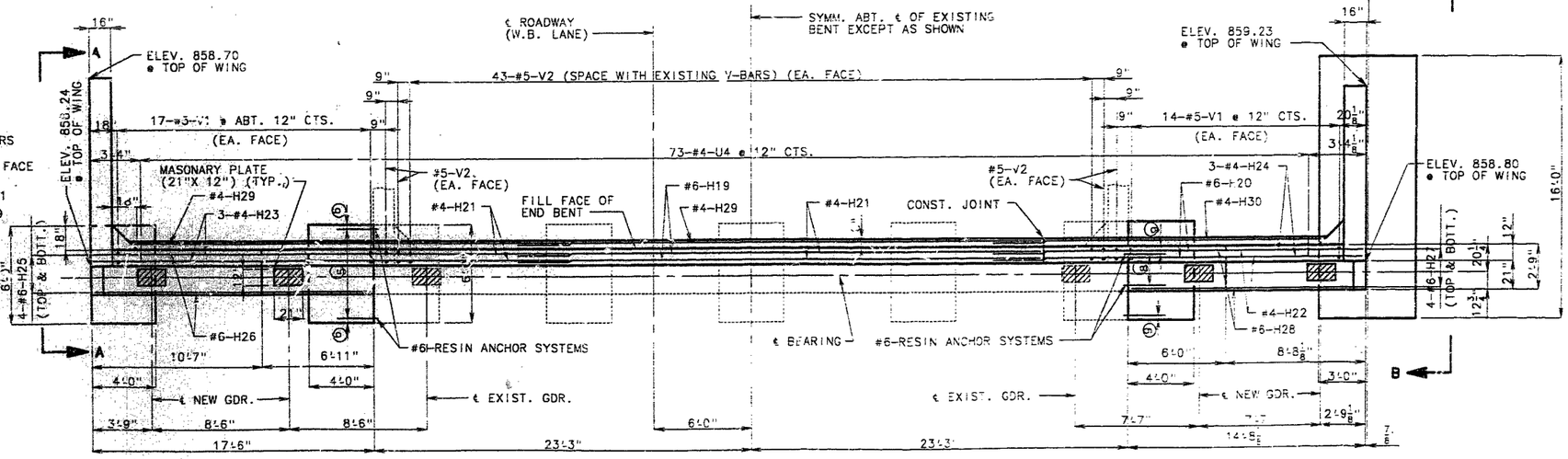

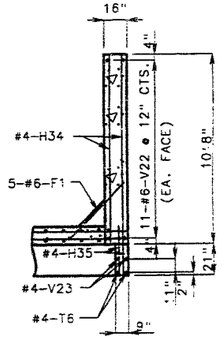

SECTION THRU WING

⑤ = 6-#6-RESIN ANCHOR SYSTEMS (TOP & BOTT.) @ 12 1/2" CTS.
⑥ = 4 3/4"
⑧ = 3-#6-RESIN ANCHOR SYSTEMS (TOP & BOTT.) @ 12" CTS.
⑨ = 4 1/2"

△ Revised 5/19/94

REVISED

DETAILED APRIL 1993
CHECKED JUNE 1993

NOTE: THIS DRAWING IS NOT TO SCALE. FOLLOW DIMENSIONS.

JACKSON COUNTY

A-610R1

STATE	PROJ. NO.	SHEET NO.
MO.	J4I0807	305

FINAL PLANS

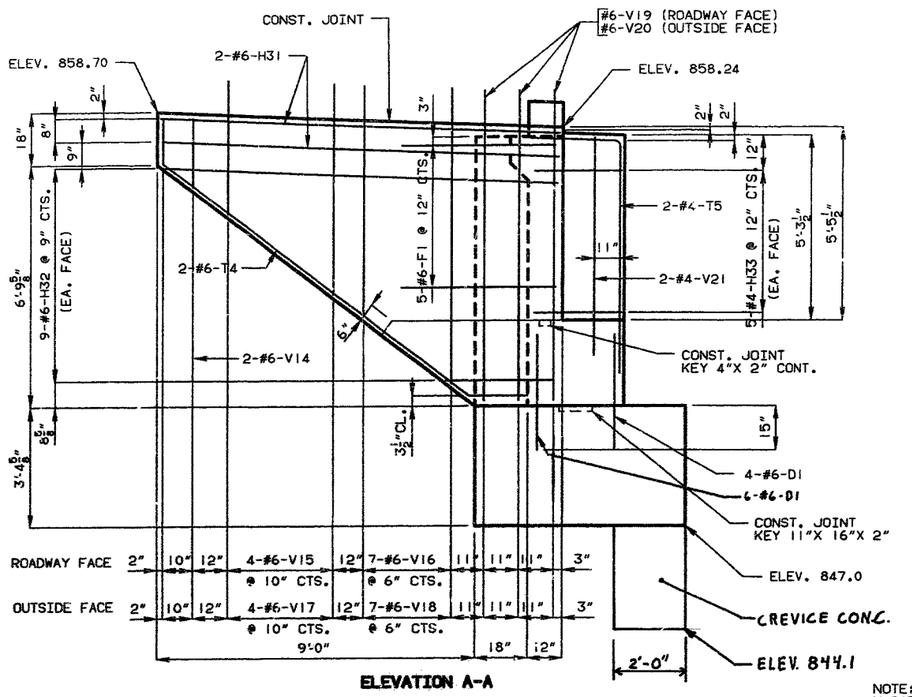

ELEVATION A-A

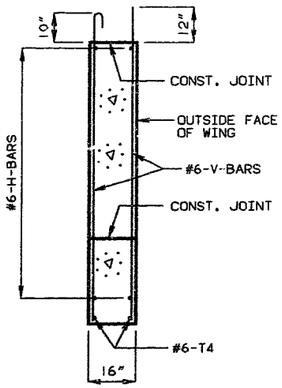

SECTION THRU WING A-A

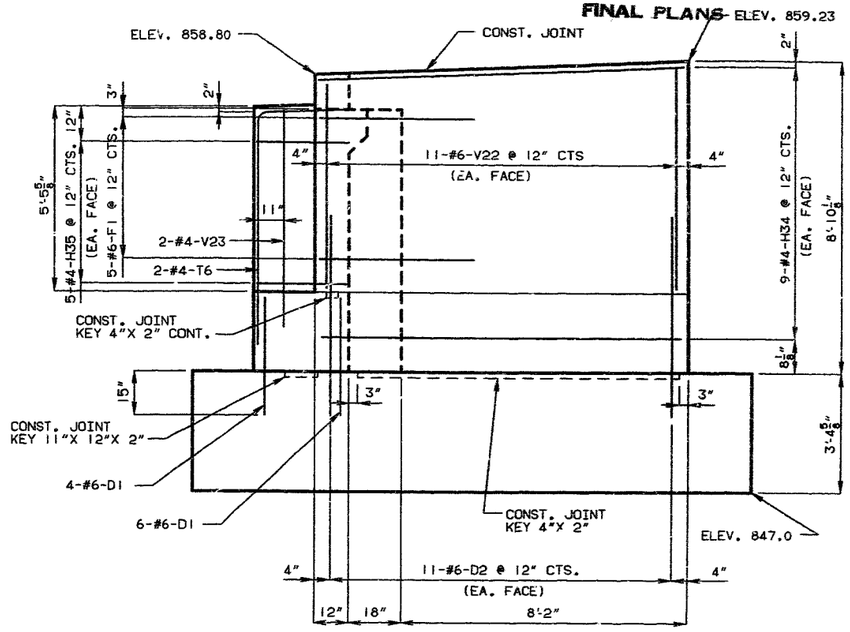

ELEVATION B-B

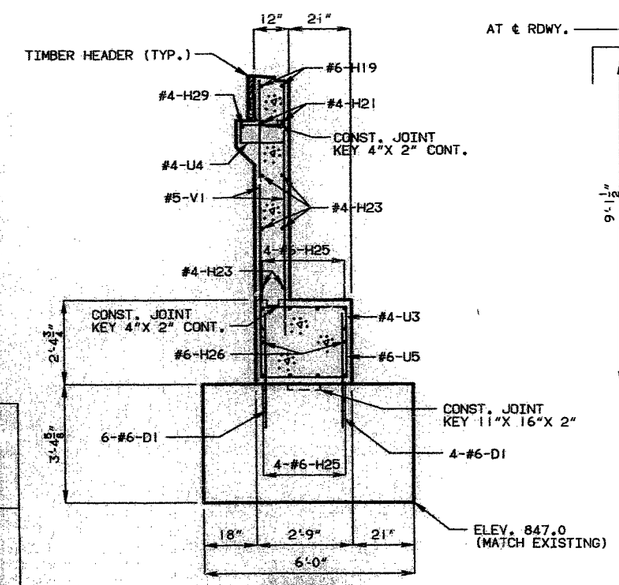

SECTION A-A

NOTE: LEAVE EXISTING V-BARS EXTEND 2'-4" INTO NEW CONCRETE.

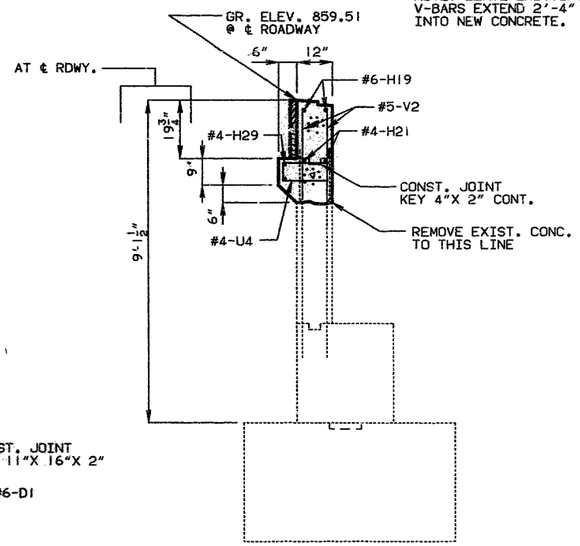

SECTION B-B

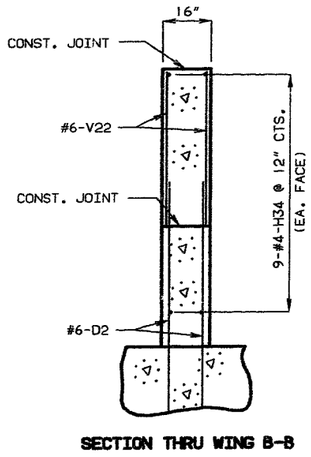

SECTION THRU WING B-B

DETAILS OF END BENT NO. 1
(WEST BOUND LANE)

SUBSTRUCTURE QUANTITY TABLE FOR BENT NO. 1		
ITEM		QUANTITY
CLASS I EXCAVATION	CU. YDS.	49.5
CLASS B CONCRETE (SUBSTR.)	CU. YDS.	38.6
REINFORCING STEEL (BRIDGES)	LB.	3410
REINFORCING STEEL (EPOXY COATED)	LB.	540
CLASS I +25% EXC.	CU. YD.	1.0
CREVICE CONC.	CU. YD.	0.9
FOUNDATION TEST HOLES	L. F.	20

NOTE: THE AREA EXPOSED BY THE REMOVAL OF CONCRETE AND NOT COVERED WITH NEW CONCRETE SHALL BE COATED WITH AN APPROVED BITUMINOUS PAINT.
FOR DETAILS OF TIMBER HEADER SEE SHEET NO. 43.

30-344

REVISED

DETAILED MAY 1993
CHECKED JUNE 1993

NOTE: THIS DRAWING IS NOT TO SCALE. FOLLOW DIMENSIONS.

JACKSON COUNTY A-610R1

STATE	PROJ. NO.	SHEET NO.
MD.	J4L0807	307

FINAL PLANS

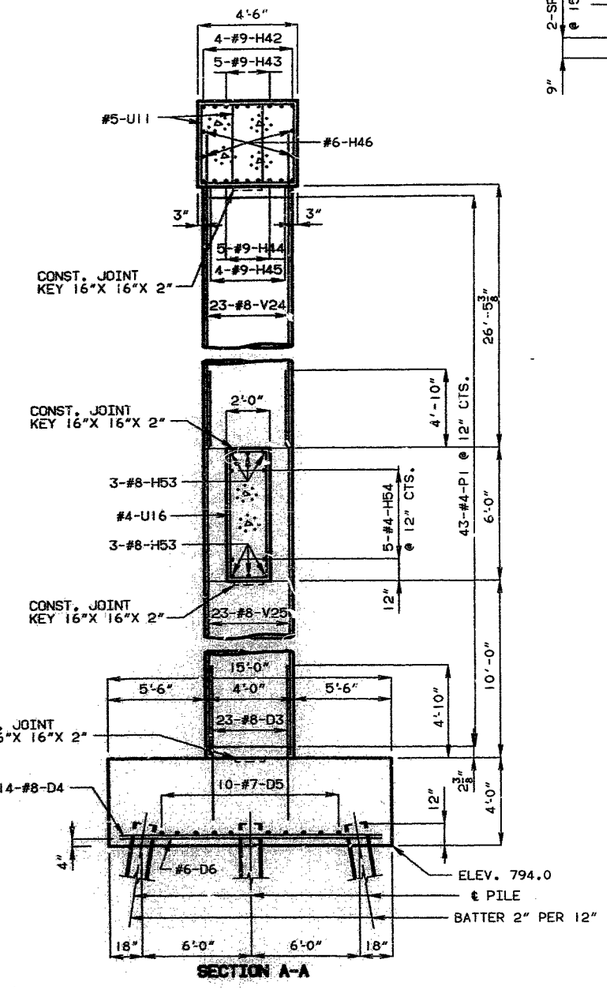

SECTION A-A

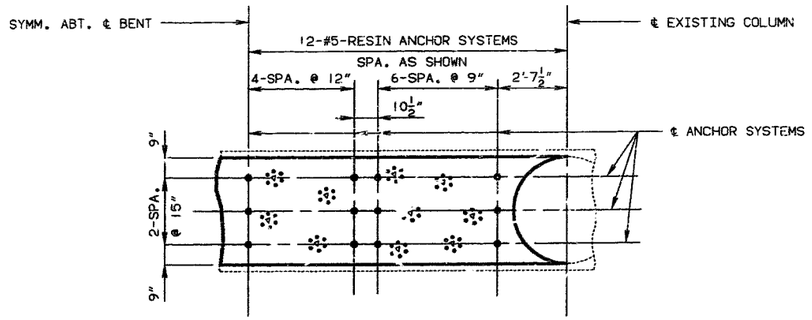

SECTION F-F

(NOTE: SECTION SHOWING RESIN ANCHOR SYSTEMS)

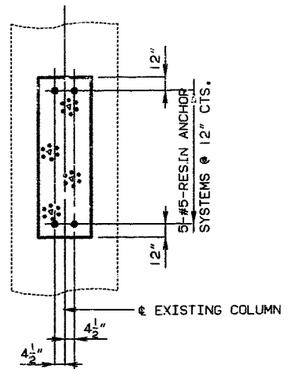

SECTION E-E

(NOTE: SECTION SHOWING RESIN ANCHOR SYSTEMS)

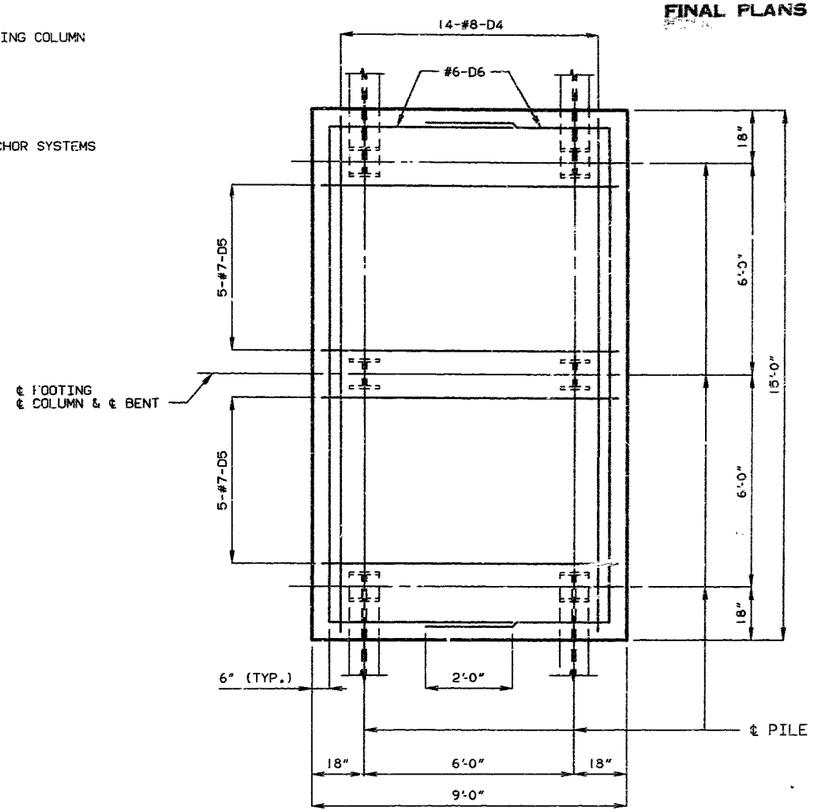

PLAN OF FOOTING

NOTE: FOR LOCATION OF SECTIONS A-A, E-E AND F-F SEE SHEET NO. 9.

SUBSTRUCTURE QUANTITY TABLE FOR BENT NO. 2

ITEM		QUANTITY
CLASS 1 EXCAVATION	CU. YDS.	233
STRUCTURAL STEEL PILE (12")	LIN. FT.	265
PRE-BORE	LIN. FT.	156
CLASS B CONCRETE (SUBSTR.)	CU. YDS.	114.5
REINFORCING STEEL (BRIDGES)	LBS.	14160

NOTE: WORK THIS TABLE WITH ESTIMATED QUANTITIES AS SHOWN ON SHEET NO. 2.

REVISED:

DETAILED JUNE 1993
CHECKED JULY 1993

DETAILS OF INTERMEDIATE BENT NO. 2 (E.B.L.)

NOTE: THIS DRAWING IS NOT TO SCALE. FOLLOW DIMENSIONS.

JACKSON COUNTY

A-610R1

STATE	PROJ. NO.	SHEET NO.
MO.	J4I0807	309

FINAL PLANS

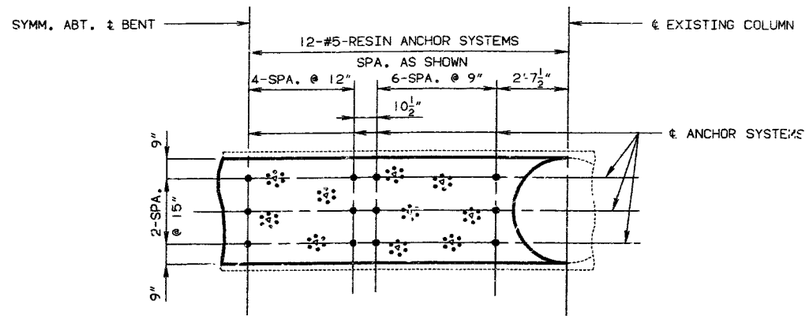

SECTION G-G

(NOTE: SECTION SHOWING RESIN ANCHOR SYSTEMS)

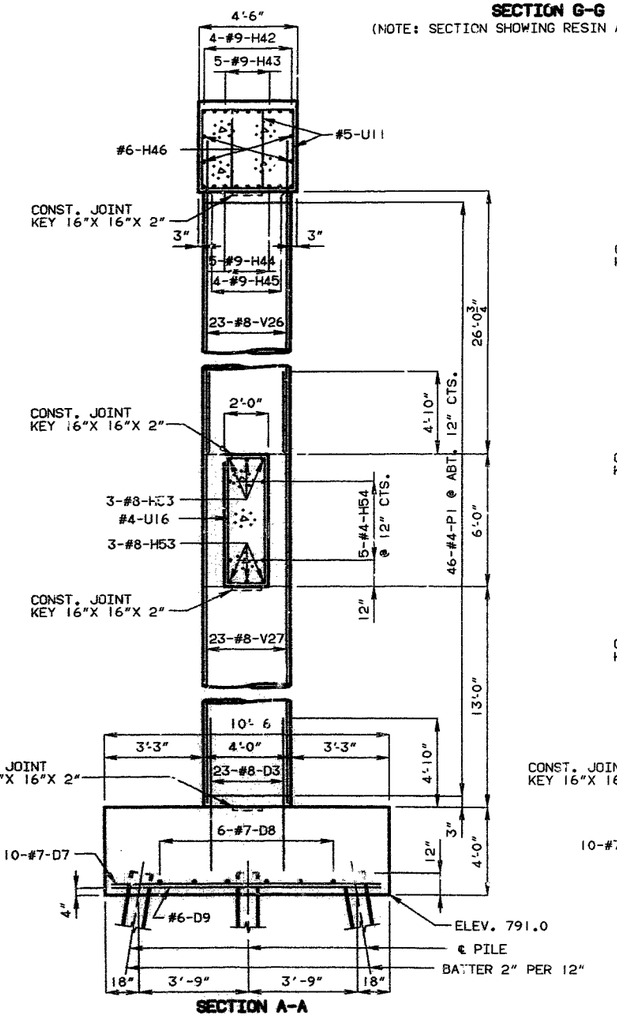

SECTION A-A

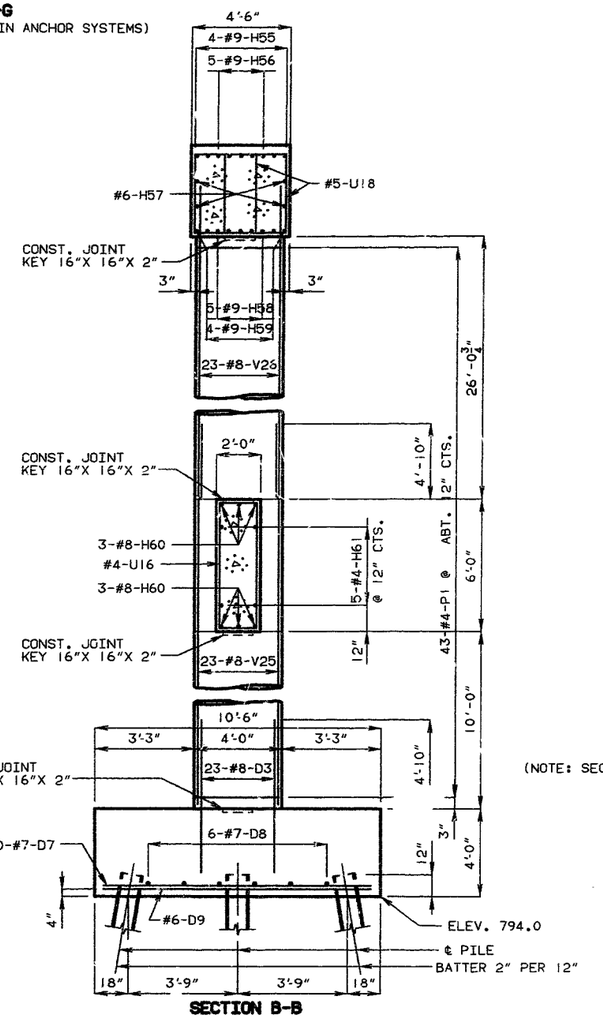

SECTION B-B

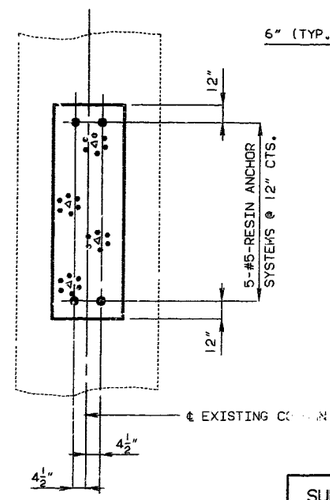

SECTION F-F

(NOTE: SECTION SHOWING RESIN ANCHOR SYSTEMS)

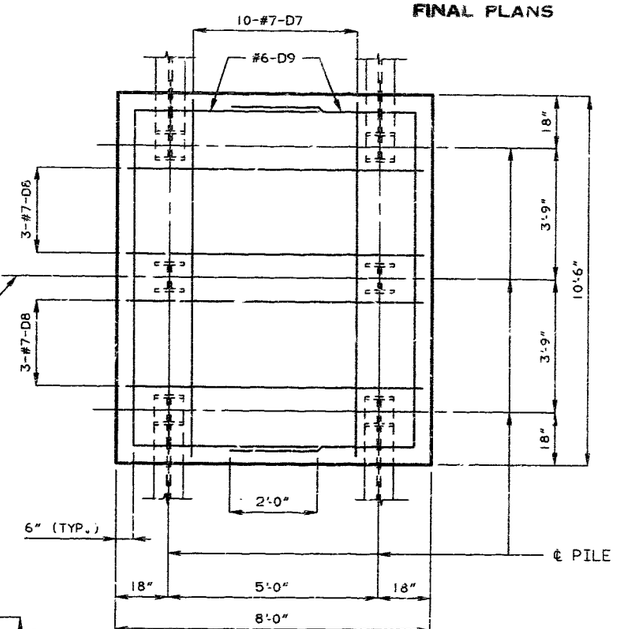

PLAN OF FOOTING

NOTE: FOR LOCATION OF SECTIONS A-A, B-B, F-F AND G-G SEE SHEET NO. 11.

SUBSTRUCTURE QUANTITY TABLE FOR BENT NO. 2		
ITEM		QUANTITY
CLASS I EXCAVATION	CU. YDS.	143.5
STRUCTURAL STEEL PILE (12")	LIN. FT.	204
PRE-BORE	LIN. FT.	138
CLASS B CONCRETE (SUBSTR.)	CU. YDS.	109.8
REINFORCING STEEL (BRIDGES)	LBS.	13540

NOTE: WORK THIS TABLE WITH ESTIMATED QUANTITIES AS SHOWN ON SHEET NO. 2.

337 346

REVISED:

DETAILS OF INTERMEDIATE BENT NO. 2 (W.B.L.)

DETAILED JULY 1993
CHECKED AUG. 1993

NOTE: THIS DRAWING IS NOT TO SCALE. FOLLOW DIMENSIONS.

JACKSON COUNTY

A-610Ri

STATE	PROJ. NO.	SHEET NO.
MO.	Job# J4E0807 F.A.I.-435-1(251)	

FINAL PLANS

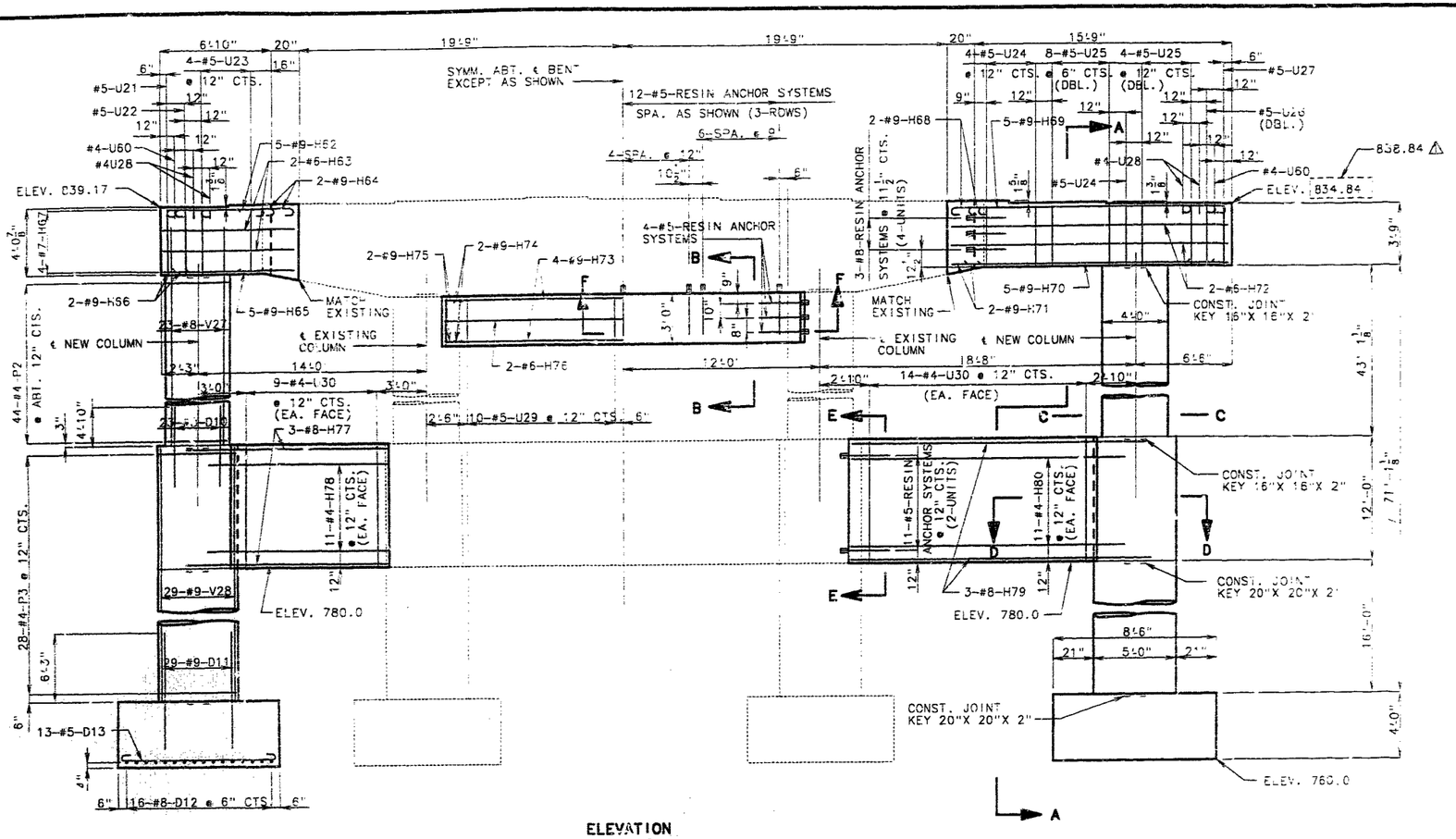

ELEVATION

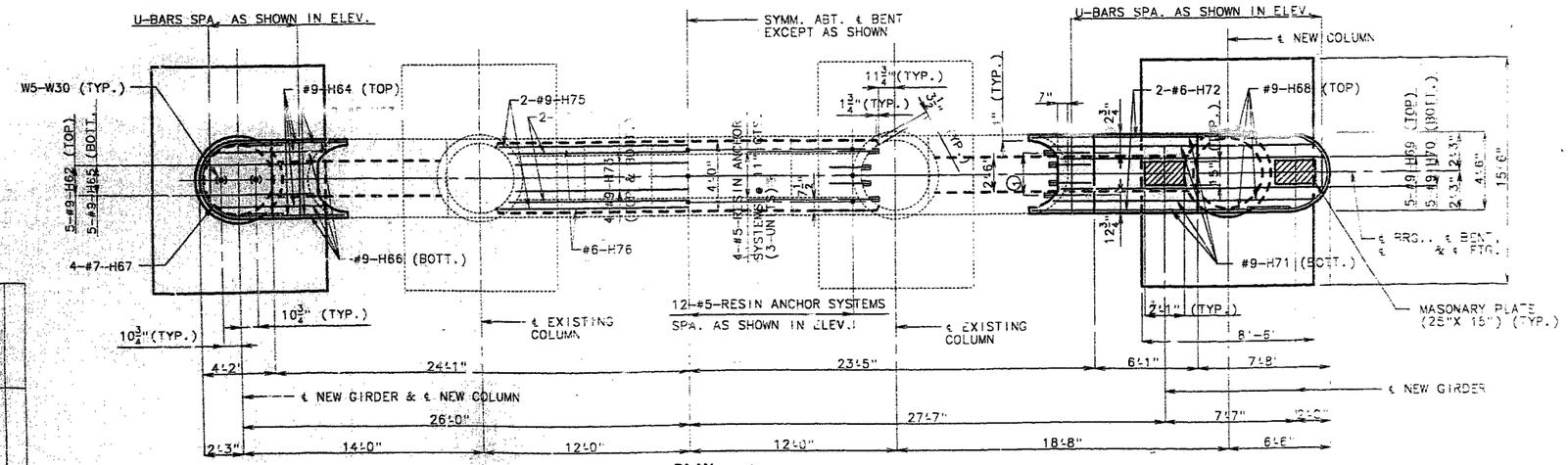

PLAN

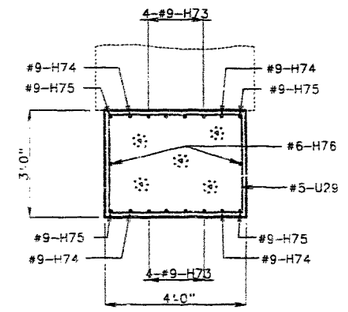

SECTION B-B

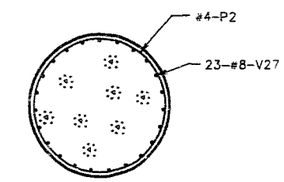

SECTION C-C

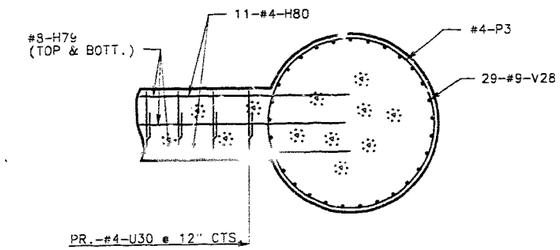

SECTION D-D

① 4-#8-RESIN ANCHOR SYSTEMS @ 9½" (3-UNITS)

NOTE: FOR DETAILS OF RESIN ANCHOR SYSTEMS SEE SHEET NO. 22.
FOR SECTION A-A, E-E, F-F AND SUBSTRUCTURE QUANITY TABLE FOR BENT NO. 3 SEE SHEET. NO. 14.
FOR DETAILS OF ANCHOR BOLT WELLS SEE SHEET NO. 32.

△ Revised 5/19/94

DETAILS OF INTERMEDIATE BENT NO. 3 (E.B.L.)

DETAILED JUNE 1993
CHECKED JULY 1993

NOTE: THIS DRAWING IS NOT TO SCALE. FOLLOW DIMENSIONS.

SHEET NO. 13 OF 51.

JACKSON COUNTY

A-610R1

347

STATE	PROJ. NO.	SHEET NO.
MD.	J4IG887	311

FINAL PLANS

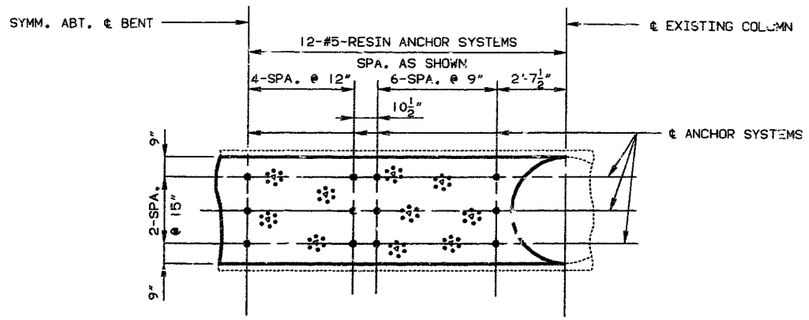

SECTION F-F

(NOTE: SECTION SHOWING RESIN ANCHOR SYSTEMS)

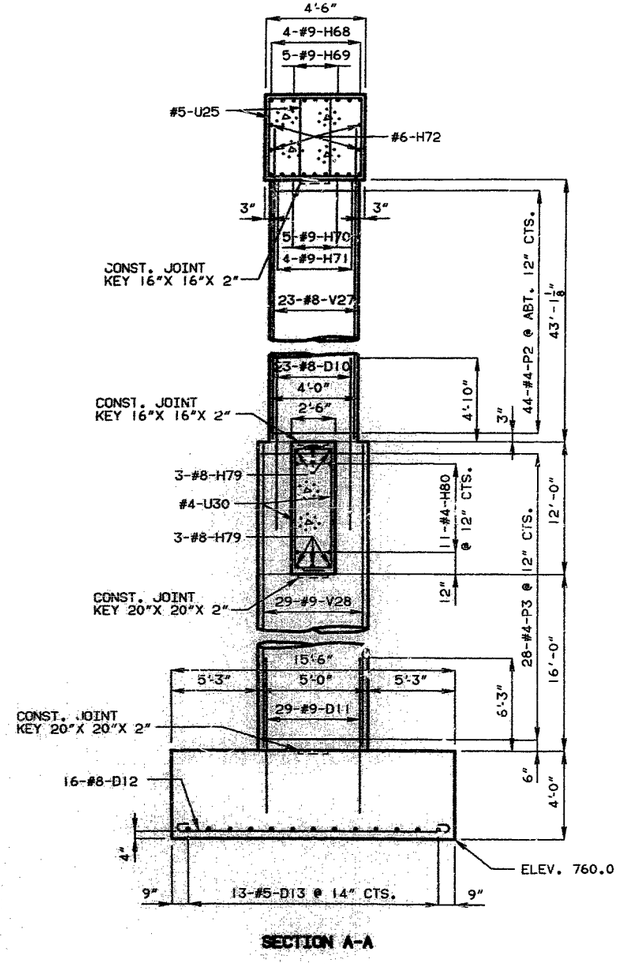

SECTION A-A

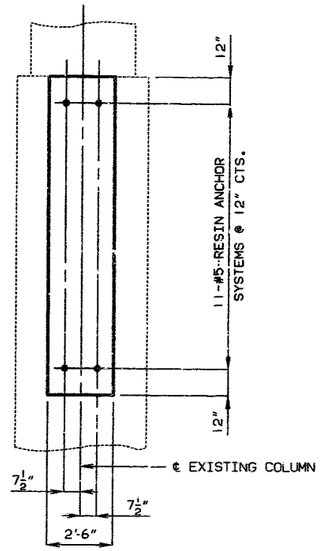

SECTION E-E

(NOTE: SECTION SHOWING RESIN ANCHOR SYSTEMS)

NOTE: FOR LOCATION OF SECTIONS A-A, E-E AND F-F SEE SHEET NO. 13.

SUBSTRUCTURE QUANTITY TABLE FOR BENT NO. 3		
ITEM		QUANTITY
CLASS 1 EXCAVATION	CU. YDS.	213
CLASS 2 EXCAVATION	CU. YDS.	113
CLASS B CONCRETE (SUBSTR.)	CU. YDS.	169.5
REINFORCING STEEL (BRIDGES)	LBS.	22070
FOUNDATION TEST HOLES	LIN. FT.	8

NOTE: WORK THIS TABLE WITH ESTIMATED QUANTITIES AS SHOWN ON SHEET NO. 2.

DETAILS OF INTERMEDIATE BENT NO. 3 (E.B.L.)

REVISED 3-26-98

DETAILED JUNE 1993
CHECKED JULY 1993

NOTE: THIS DRAWING IS NOT TO SCALE. FOLLOW DIMENSIONS.

JACKSON COUNTY

A-610R1

STATE	PROJ. NO.	SHEET NO.
MO.	J4I0807	3/3

FINAL PLANS

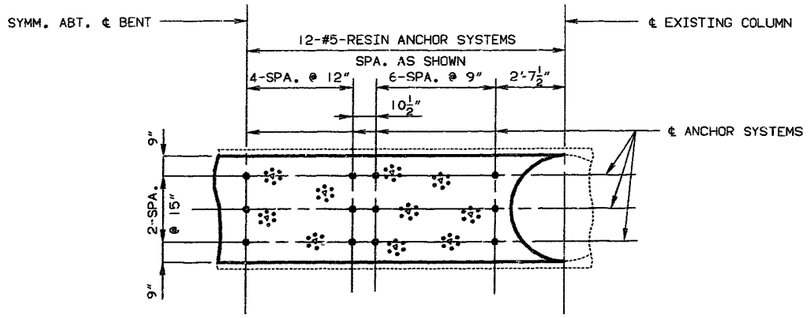

SECTION F-F

(NOTE: SECTION SHOWING RESIN ANCHOR SYSTEMS)

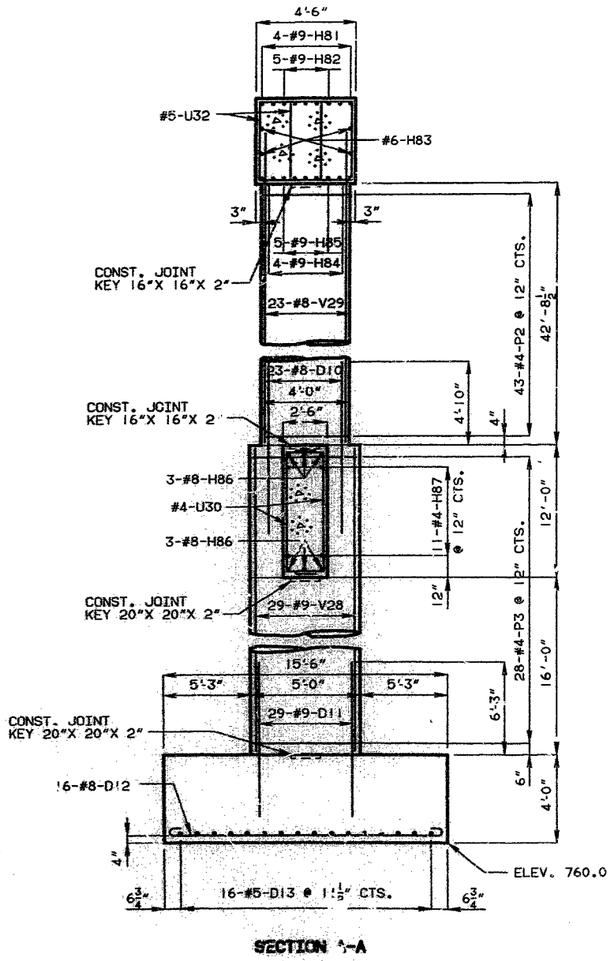

SECTION A-A

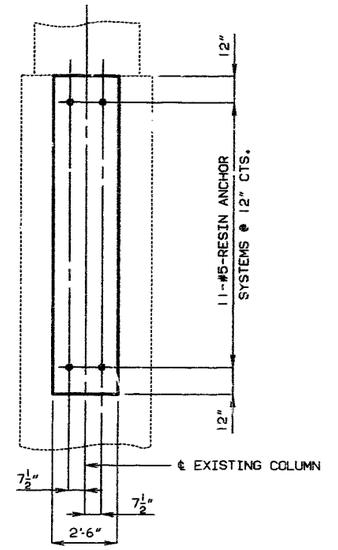

SECTION E-E

(NOTE: SECTION SHOWING RESIN ANCHOR SYSTEMS)

NOTE: FOR LOCATION OF SECTIONS A-A, E-E AND F-F SEE SHEET NO. 15.

SUBSTRUCTURE QUANTITY TABLE FOR BENT NO. 3		
ITEM		QUANTITY
CLASS I EXCAVATION	CU. YDS.	212.5
CLASS 2 EXCAVATION	CU. YDS.	111.0
CLASS B CONCRETE (SUBSTR.)	CU. YDS.	182.0
REINFORCING STEEL (BRIDGES)	LBS.	23880
FOUNDATION TEST HOLES	LIN. FT.	8

NOTE: WORK THIS TABLE WITH ESTIMATED QUANTITIES AS SHOWN ON SHEET NO. 2.

DETAILS OF INTERMEDIATE BENT NO. 3 (W.B.L.)

REVISION

DETAILED AUG. 1993
CHECKED AUG. 1993

NOTE: THIS DRAWING IS NOT TO SCALE. FOLLOW DIMENSIONS.

JACKSON COUNTY A-610R1

STATE	PROJ. NO.	SHEET NO.
MO.	J9I0867	315

FINAL PLANS

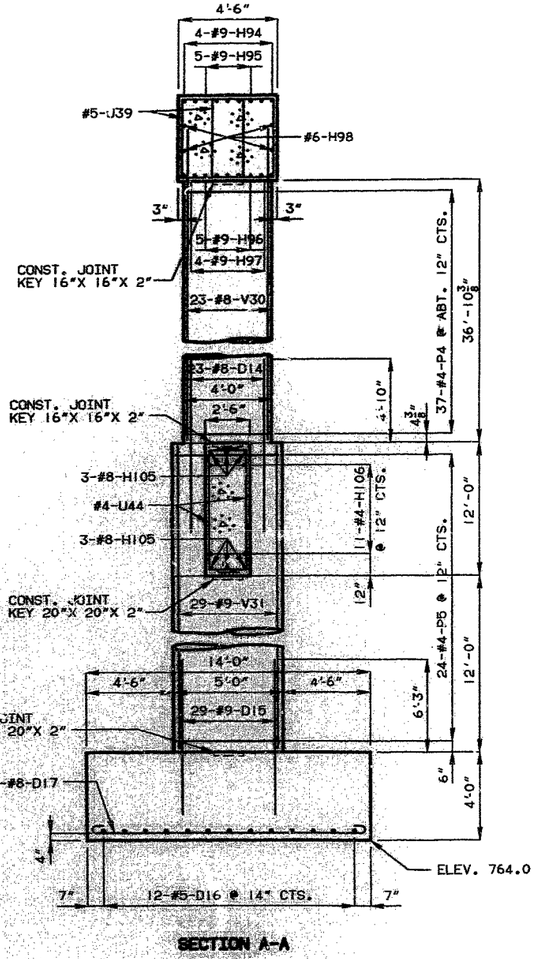

SECTION A-A

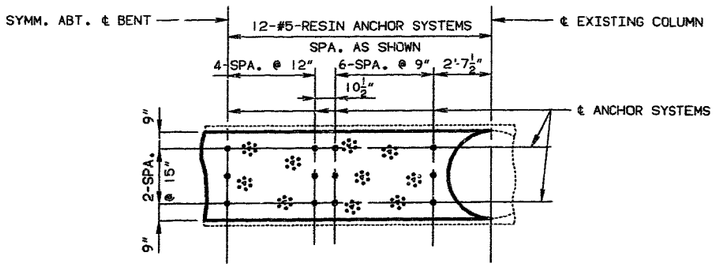

SECTION F-F

(NOTE: SECTION SHOWING RESIN ANCHOR SYSTEMS)

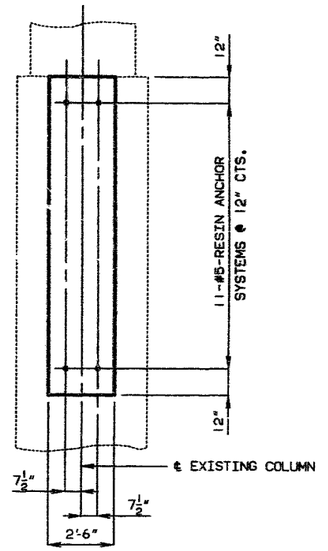

SECTION E-E

(NOTE: SECTION SHOWING RESIN ANCHOR SYSTEMS)

NOTE: FOR LOCATION OF SECTIONS A-A, E-E AND F-F SEE, SHEET NO. 17.

SUBSTRUCTURE QUANTITY TABLE FOR BENT NO. 4		
ITEM		QUANTITY
CLASS I EXCAVATION	CU. YDS.	258.5 ✓
CLASS 2 EXCAVATION	CU. YDS.	52.5 ✓
CLASS B CONCRETE (SUBSTR.)	CU. YDS.	152.0 ✓
REINFORCING STEEL (BRIDGES)	LBS.	20250 ✓
FOUNDATION TEST HOLES	LIN. FT.	8 ✓

NOTE: WORK THIS TABLE WITH ESTIMATED QUANTITIES AS SHOWN ON SHEET NO. 2.

REVISED

DETAILED JUNE 1993
CHECKED JULY 1993

DETAILS OF INTERMEDIATE BENT NO. 4 (E.B.L.)

NOTE: THIS DRAWING IS NOT TO SCALE. FOLLOW DIMENSIONS.

STATE	PROJ. NO.	SHEET NO.
NO.	J41P807	317

FINAL PLANS

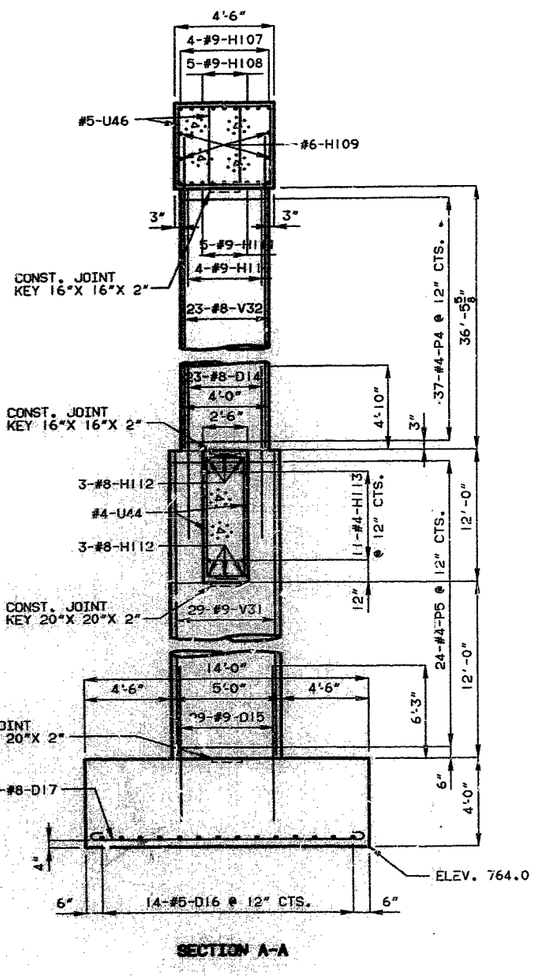

SECTION A-A

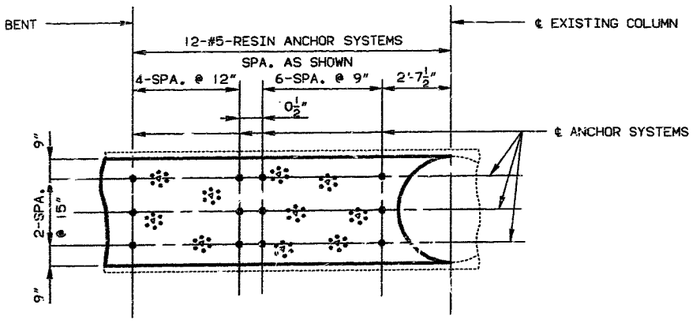

SECTION F-F

(NOTE: SECTION SHOWING RESIN ANCHOR SYSTEMS)

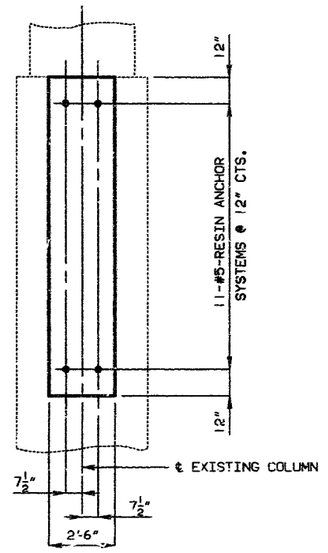

SECTION E-E

(NOTE: SECTION SHOWING RESIN ANCHOR SYSTEMS)

NOTE: FOR LOCATION OF SECTIONS A-A, E-E AND F-F SEE SHEET NO. 19.

SUBSTRUCTURE QUANTITY TABLE FOR BENT NO. 4		
ITEM		QUANTITY
CLASS I EXCAVATION	CU. YDS.	252.5
CLASS 2 EXCAVATION	CU. YDS.	54.5
CLASS B CONCRETE (SUBSTR.)	CU. YDS.	164.6
REINFORCING STEEL (BRIDGES)	LBS.	22010
FOUNDATION TEST HOLES	LIN. FT.	8

NOTE: WORK THIS TABLE WITH ESTIMATED QUANTITIES AS SHOWN ON SHEET NO. 2.

DETAILS OF INTERMEDIATE BENT NO. 4 (W.B.L.)

DETAILED AUG. 1993
CHECKED AUG. 1993

NOTE: THIS DRAWING IS NOT TO SCALE. FOLLOW DIMENSIONS.

JACKSON COUNTY A-6101

STATE	PROJ. NO.	SHEET NO.
MO.	Job # J4I0887 F.A.I. -435-1(251)	

FINAL PLANS FINAL PLANS

46'-9" (3RD. STAGE CONST.) 20'-0" (1ST. STAGE CONST.)

ELEVATION

PLAN

PLAN OF BEAM

SECTION A-A

SECTION B-B

SECTION C-C

SECTION D-D

SECTION E-E

DETAILS OF END BENT NO. 5
(EAST BOUND LANE)

NOTE: FOR ELEVATION A-A, B-B, DETAILS OF RESIN ANCHOR SYSTEMS, KEY, STEEL PILE SPLICE AND SUBSTRUCTURE QUANITY TABLE SEE SHEET NO. 22.
FOR DETAILS AND REINFORCEMENT OF SAFETY BARRIER CURB SEE SHEETS NO. 40, 41 & 43.
SHIFT REINFORCING STEEL TO CLEAR THE ANGLES OF THE SUPPORT CHAIRS.
FIELD BENDING SHALL BE REQUIRED FOR #6-F BARS WHEN NECESSARY TO CONFORM TO SLOPE OF WING.
△ FIELD DRILL 3-1 1/8" Ø HOLES IN EXISTING GIRDERS. COST OF FIELD DRILLING HOLES IN EXISTING GIRDERS SHALL BE INCLUDED IN THE CONTRACT UNIT PRICE FOR PARTIAL REMOVAL OF SUBSTRUCTURE CONCRETE.
FOR DETAILS OF SUPPORT CHAIR SEE SHEET NO. 29.

△ Revised 5/19/94

DETAILED APRIL 1993
CHECKED JUNE 1993

NOTE: THIS DRAWING IS NOT TO SCALE. FOLLOW DIMENSIONS.

JACKSON COUNTY

A-610R1

STATE	PROJ. NO.	SHEET NO.
MO.	J4I0807	319

FINAL PLANS

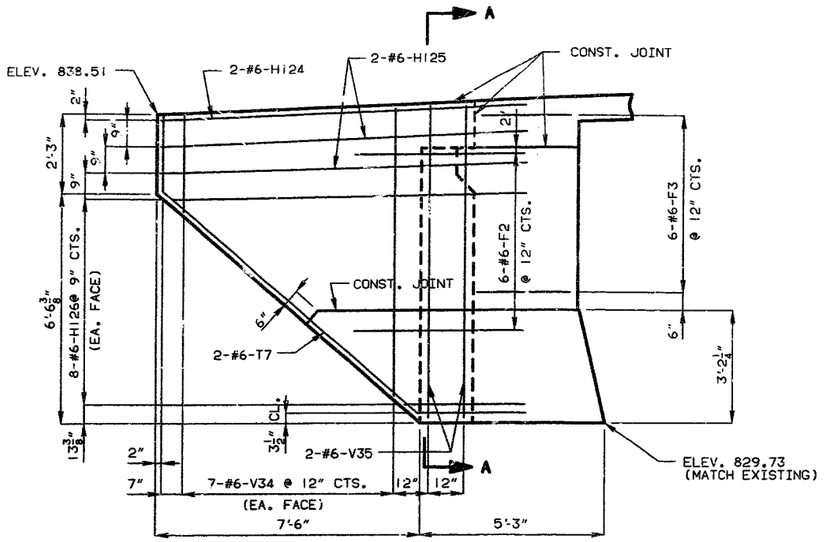

ELEVATION A-A

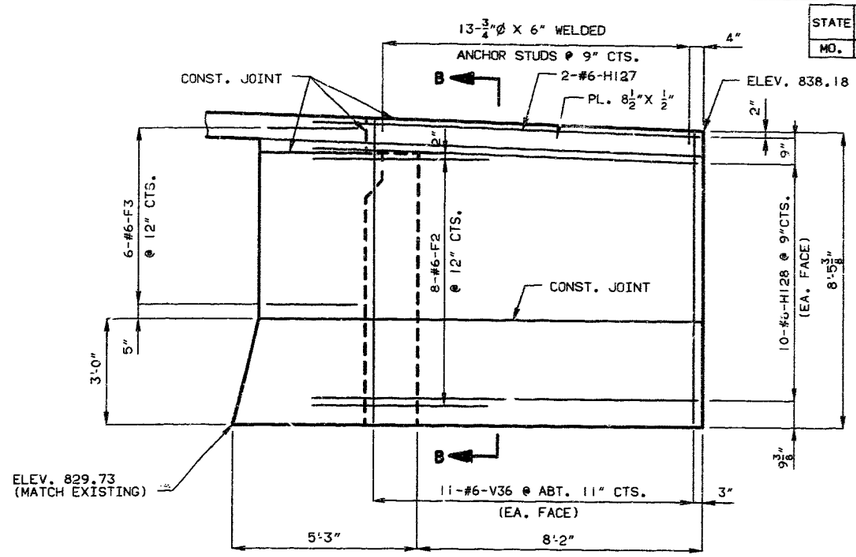

ELEVATION B-B

NOTE: COST OF FURNISHING AND INSTALLING RESIN ANCHOR SYSTEMS SHALL BE INCLUDED IN THE CONTRACT UNIT PRICE FOR CONCRETE. SEE SPECIAL PROVISIONS FOR ACCEPTABLE RESIN ANCHOR SYSTEMS. THESE RESIN ANCHOR SYSTEMS SHALL BE INSTALLED ACCORDING TO THE MANUFACTURER'S SPECIFICATIONS EXCEPT AS MODIFIED BY THE JOB SPECIAL PROVISIONS AND THAT AN EPOXY COATED #6, GRADE 60 REINFORCING BAR PROJECTING 15" (EXCEPT AT APPROACH HAUNCH 7 1/2") INTO NEW CONCRETE SHALL BE USED.

A ① EPOXY COATED STRAIGHT REINFORCING BAR MAY BE SUBSTITUTED FOR A ② HOOKED BAR AS SHOWN ON PLANS.

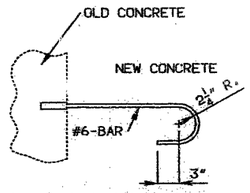

DETAIL OF RESIN ANCHOR SYSTEM

BAR SIZE & LENGTH	
①	②
#5	21"
#6	2'-3"
#8	4'-0"

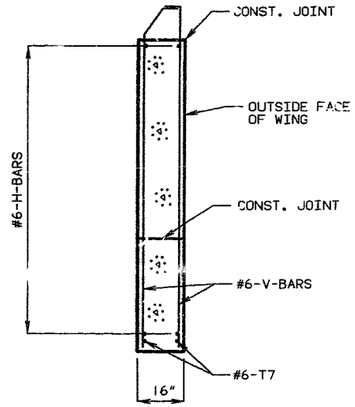

SECTION A-A

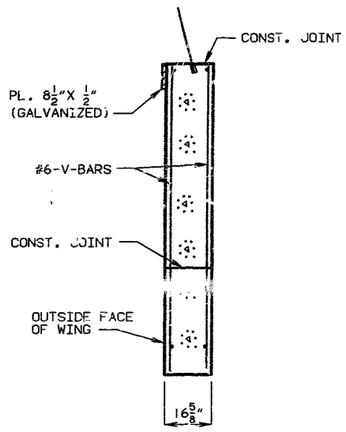

SECTION B-B

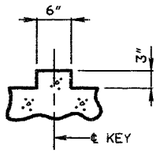

SECTION THRU KEY

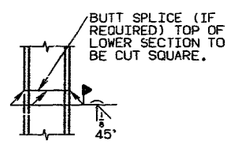

STEEL PILE SPLICE

SUBSTPUCTURE QUANTITY TABLE FOR BENT NO. 5		
ITEM		QUANTITY
CLASS I EXCAVATION	CU. YDS.	25.0
STRUCTURAL STEEL PILES (10")	LIN. FT.	263
CLASS B CONCRETE (SUBSTR.)	CU. YDS.	10.0
PILE POINT REINFORCEMENT	EA.	4

NOTE: THESE QUANTITIES ARE INCLUDED IN THE ESTIMATED QUANTITIES TABLE ON SHEET NO. 2.

NOTE: CONCRETE DIAPHRAGMS SHALL BE POURED PRIOR TO THE SLAB, ALLOWING SUFFICIENT TIME FOR THE SET OF THE CONCRETE IN THE DIAPHRAGMS.

ALL CONCRETE IN THE END BENT ABOVE TOP OF BEAM AND BELOW TOP OF SLAB SHALL BE CLASS B2.

THE AREA EXPOSED BY THE REMOVAL OF CONCRETE AND NOT COVERED WITH NEW CONCRETE SHALL BE COATED WITH AN APPROVED BITUMINOUS PAINT.

REVISED

DETAILED APRIL 1993
CHECKED JUNE 1993

DETAILS OF END BENT NO. 5
(EAST BOUND LANE)

NOTE: THIS DRAWING IS NOT TO SCALE. FOLLOW DIMENSIONS.

JACKSON COUNTY A-610R1

STATE	PROJ. NO.	SHEET NO.
MO.	Job# 34EB047 1 F.A.I. - 435 - 1(251)	

FINAL PLANS FINAL PLANS

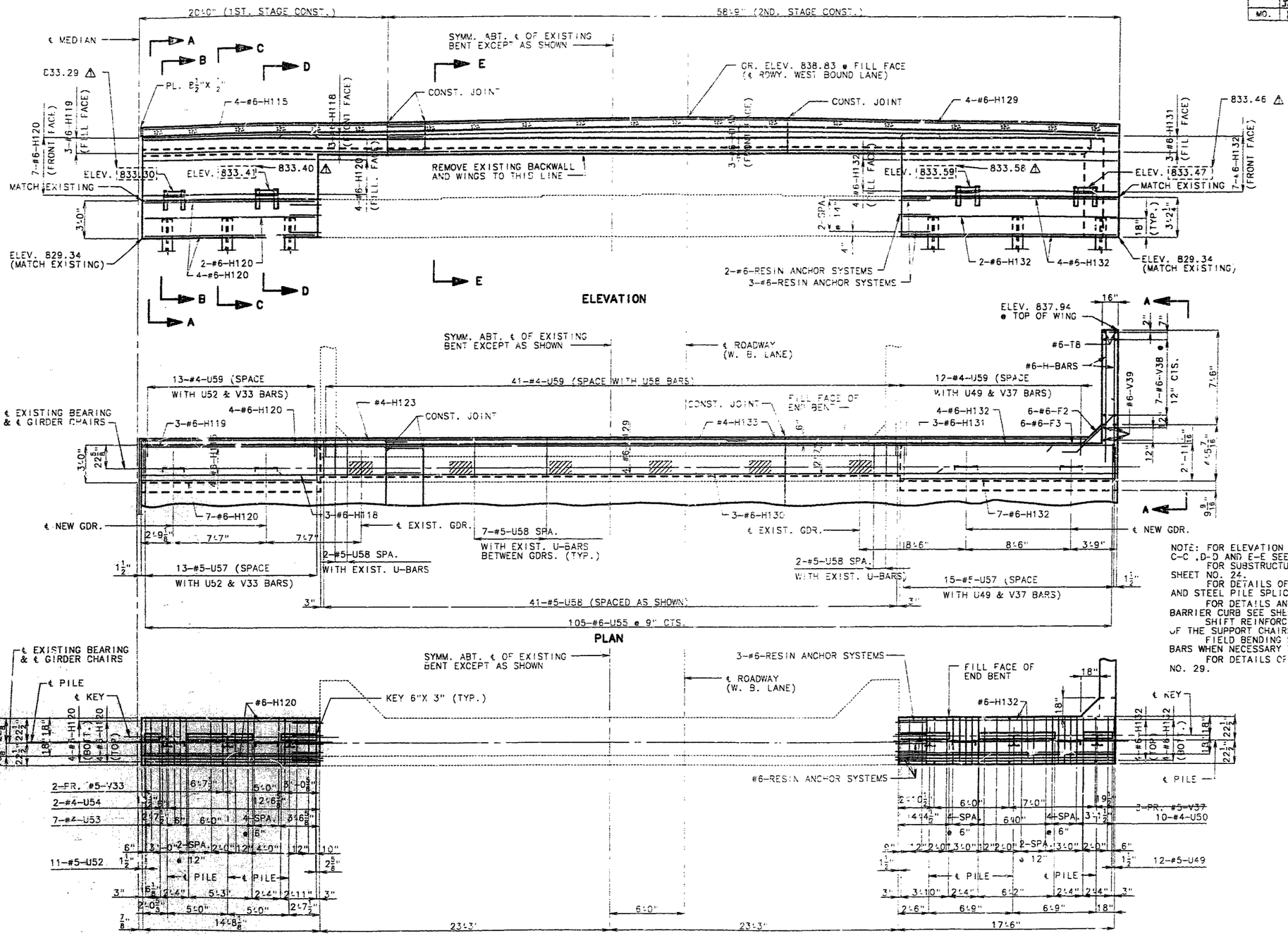

DETAILS OF END BENT NO. 5

(WEST BOUND LANE)

NOTE: FOR ELEVATION A-A AND SECTION A-A, B-B, C-C ,D-D AND E-E SEE SHEET NO. 24.
FOR SUBSTRUCTURE QUANITY TABLE SEE SHEET NO. 24.
FOR DETAILS OF RESIN ANCHOR SYSTEMS, KEY AND STEEL PILE SPLICE SEE SHEET NO. 22.
FOR DETAILS AND REINFORCEMENT OF SAFETY BARRIER CURB SEE SHEETS NO. 41, 42 & 43.
SHIFT REINFORCING STEEL TO CLEAR THE ANGLES OF THE SUPPORT CHAIRS.
FIELD BENDING SHALL BE REQUIRED FOR #6-F BARS WHEN NECESSARY TO CONFORM TO SLOPE OF WIN
FOR DETAILS OF SUPPORT CHAIR SEE SHEET NO. 29.

⚠ Revised 5/19/94

DETAILED APRIL 1993
CHECKED JUNE 1993

NOTE: THIS DRAWING IS NOT TO SCALE. FOLLOW DIMENSIONS.

SHEET NO. 23 OF 51.

JACKSON COUNTY

A-610R1

STATE	PROJ. NO.	SHEET NO.
WO.	J41Ø007	321

FINAL PLANS

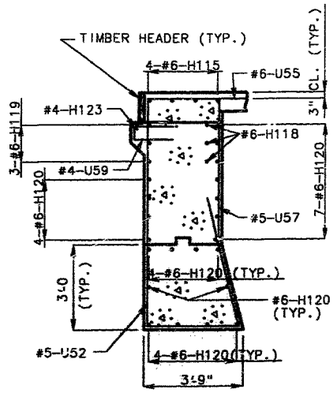

SECTION A-A

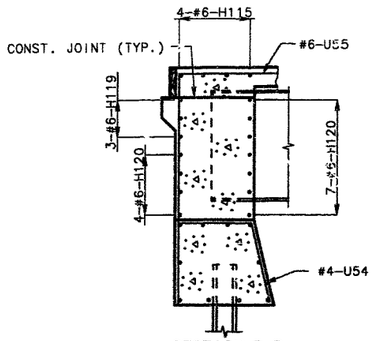

SECTION B-B

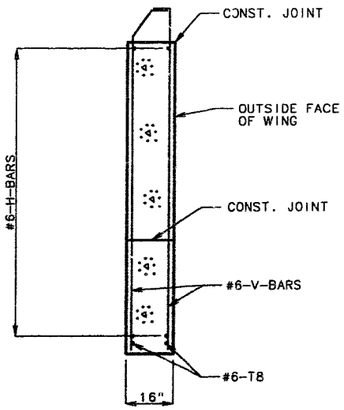

SECTION THRU WING

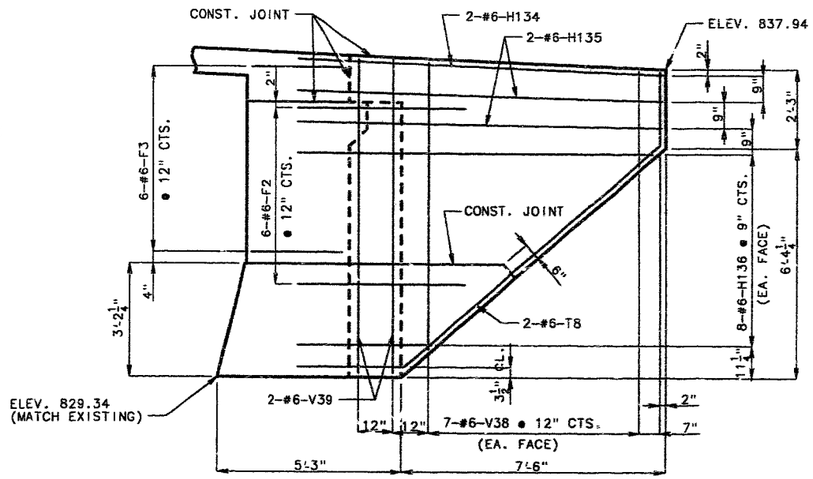

ELEVATION A-A

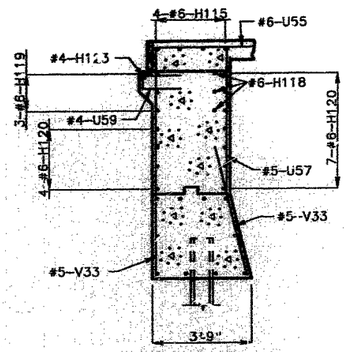

SECTION C-C

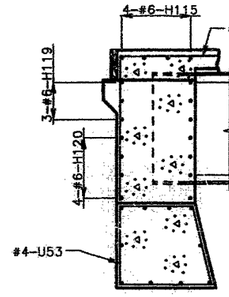

SECTION D-D

SUBSTRUCTURE QUANTITY TABLE FOR BENT NO. 5		
ITEM		QUANTITY
CLASS 1 EXCAVATION	CU. YDS.	19.0 ✓
STRUCTURAL STEEL PILES (10")	LIN. FT.	389 ✓
CLASS B CONCRETE (SUBSTR.)	CU. YDS.	13.1 ✓
PILE POINT REINFORCEMENT	EA.	6 ✓

NOTE: THESE QUANTITIES ARE INCLUDED IN THE ESTIMATED QUANTITIES TABLE ON SHEET NO. 2.

NOTE: CONCRETE DIAPHRAGMS SHALL BE POURED PRIOR TO THE SLAB, ALLOWING SUFFICIENT TIME FOR THE SET OF THE CONCRETE IN THE DIAPHRAGMS.
ALL CONCRETE IN THE END BENT ABOVE TOP OF BEAM AND BELOW TOP OF SLAB SHALL BE CLASS B2.
THE AREA EXPOSED BY THE REMOVAL OF CONCRETE AND NOT COVERED WITH NEW CONCRETE SHALL BE COATED WITH AN APPROVED BITUMINOUS PAINT.
* FIELD DRILL 3-1 1/8" Ø HOLES IN EXISTING GIRDERS. COST OF FIELD DRILLING HOLES IN EXISTING GIRDERS SHALL BE INCLUDED IN THE CONTRACT UNIT PRICE FOR PARTIAL REMOVAL OF SUBSTRUCTURE CONCRETE.

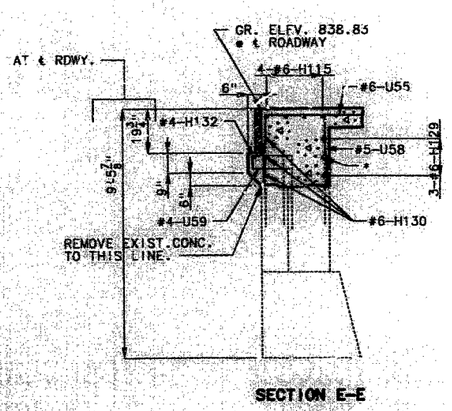

SECTION E-E

DETAILS OF END BENT NO. 5
(WEST BOUND LANE)

REVISED

DETAILED APRIL 1993
CHECKED JUNE 1993

NOTE: THIS DRAWING IS NOT TO SCALE. FOLLOW DIMENSIONS.

STATE	PROJ. NO.	SHEET NO.
MO.	Job # J4P0807 F.A.I. - 435 - 1(251)	

FINAL PLANS **FINAL** PLANS

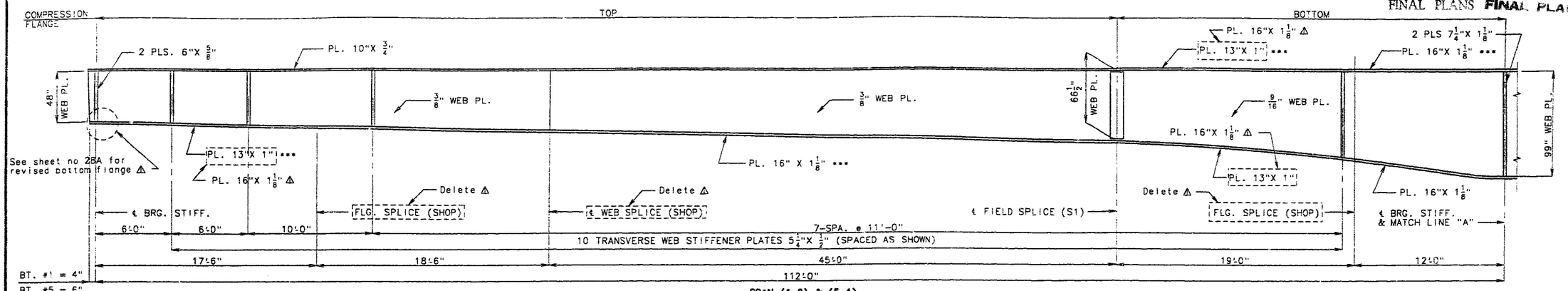

SPAN (1-2) & (5-4)

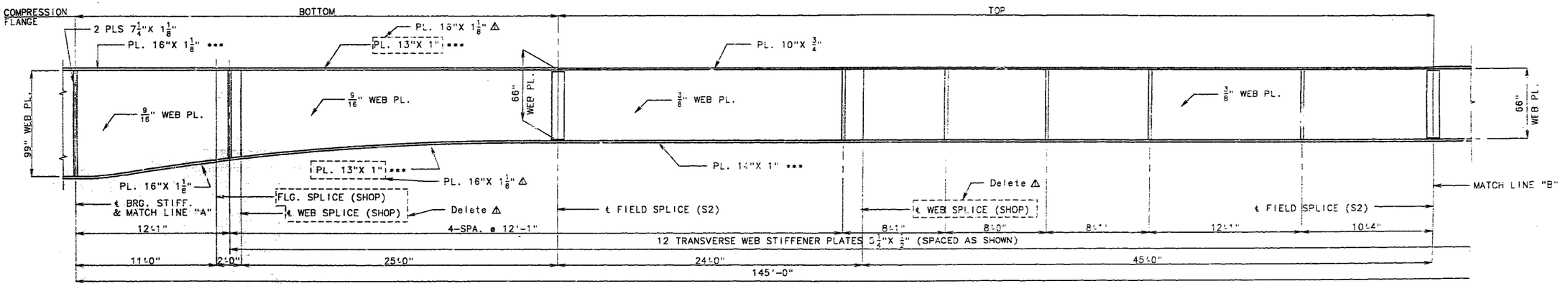

PART SPAN (2-3) & (4-3)

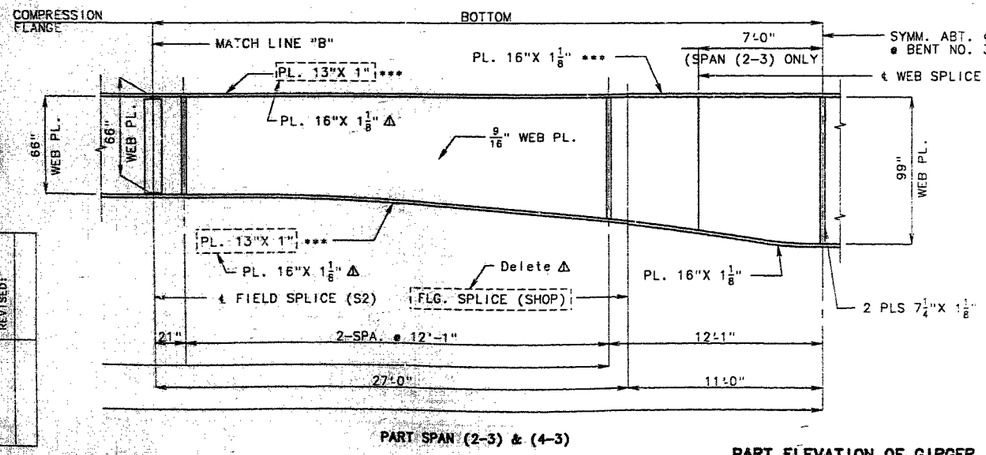

PART SPAN (2-3) & (4-3)

PART ELEVATION OF GIRGER

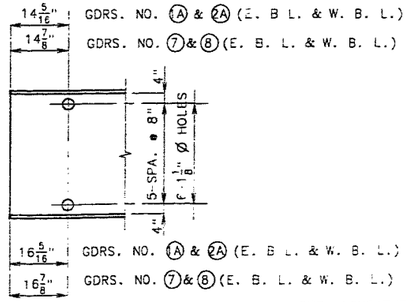

WEB HOLE DETAIL FOR NEW GIRDERS AT END BENT NO. 5

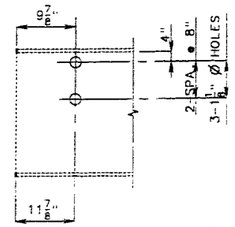

WEB HOLE DETAIL FOR EXISTING GIRDERS AT END BENT NO. 5

NOTE: LONGITUDINAL DIMENSIONS SHOWN ARE TAKEN PARALLEL TO GRADE AT CROWN OF ROADWAY.
*** INDICATES FLANGE PLATES SUBJECT TO NOTCH TOUGHNESS REQUIREMENTS.
ALL WEB PLATES, WEB SPLICE PLATES AND FLANGE SPLICE PLATES SHALL BE SUBJECT TO NOTCH TOUGHNESS REQUIREMENTS.
PLATE GIRDER SHALL BE FABRICATED TO CONFORM TO THE CAMBER DIAGRAM SHOWN ON SHEET NO. 37 & 38.
TRANSVERSE WEB STIFFENERS SHALL BE LOCATED AS SHOWN IN PLAN OF STRUCTURAL STEEL.
FABRICATED STRUCTURAL STEEL SHALL BE A36, EXCEPT AS NOTED.

◬ Revised 5/19/94

REVISED

DETAILED SEPT. 1992
CHECKED MAY 1993

NOTE: THIS DRAWING IS NOT TO SCALE. FOLLOW DIMENSIONS.

JACKSON COUNTY

A-610R1

STATE	PROJ. NO.	SHEET NO.
MO.	Job # J4I0887 F.A.I.-435-1(251)	

FINAL PLANS

FINAL PLANS

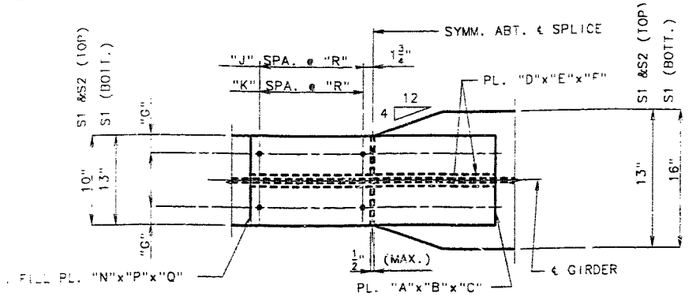

PLAN OF FLANGE
S1 & S2 (TOP) & S1 (BOTT.)

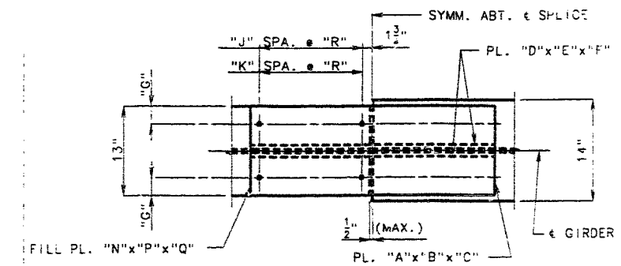

PLAN OF FLANGE
S2 (BOTT.)

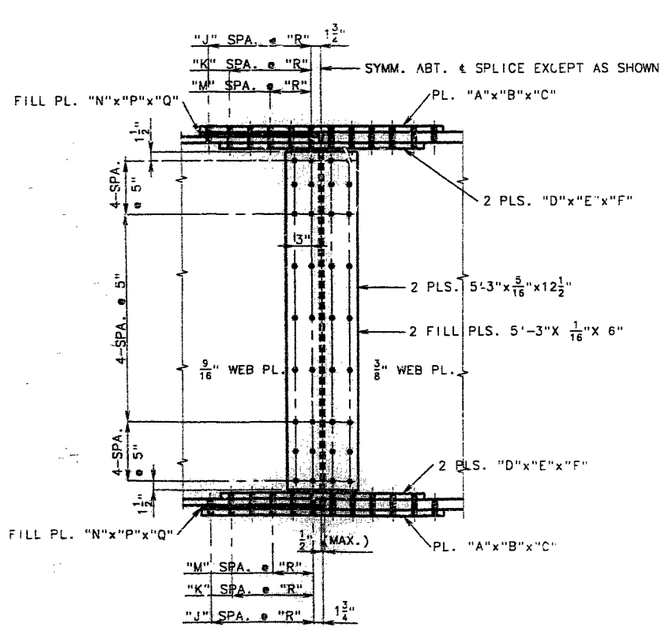

DETAIL OF BOLTED FIELD SPLICE

See sheet no. 28A for Details Of Bolted Field Splice ⚠

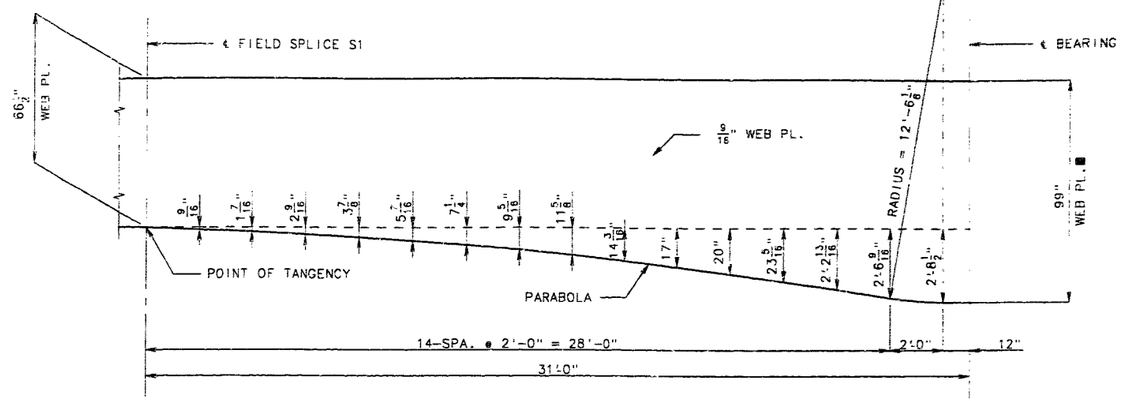

DETAIL OF GIRDER HAUNCH AT BENTS NO 2 & 4 (END SPANS)

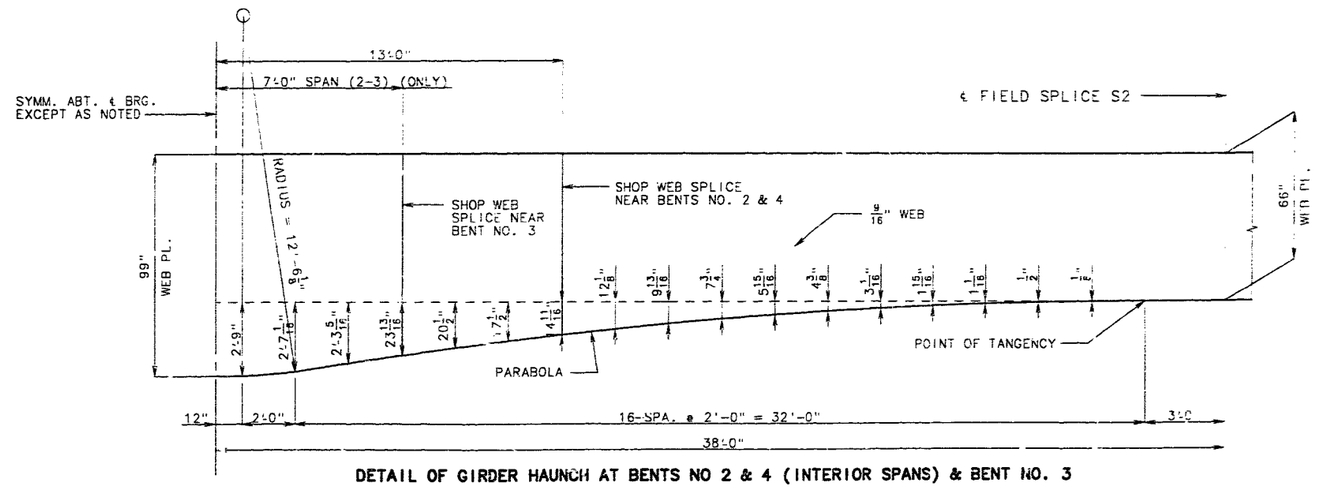

DETAIL OF GIRDER HAUNCH AT BENTS NO 2 & 4 (INTERIOR SPANS) & BENT NO. 3

SPLICE LOCATION	TABLE OF DIMENSIONS-FIELD SPLICE												
	"A"	"B"	"C"	"D"	"E"	"F"	"G"	"J"	"K"	"N"	"P"	"Q"	"R"
S1 & S2 (TOP)	10"	⅜"	18½"	4"	½"	15½"	2"	2	2	10"	¼"	9"	3"
S1 BOTT.	13"	½"	2'-6½"	5½"	5/8"	2'-6½"	2¾"	4	4	13"	⅜"	15"	3"
S2 BOTT.	13"	½"	2'-6½"	5½"	5/8"	2'-6½"	2¾"	4	4	–	–	–	3"

NOTE: USE ⅞" Ø HIGH STRENGTH BOLTS WI H 15/16" REAMED HOLES.
CONTACT SURFACES ARE TO BE BLAST CLEANED IN ACCORDANCE WITH SECTION 712.12.2.1 OF THE STANDARD SPECIFICATIONS.
USE ONE 5'3"X 1/16"X 6" FILL PLATE ON EACH SIDE OF ⅜" WEB.

SPL. PL., PG. 3.42, A36, 1 / A
FIELD SPLICE REVISED:
MAR. 1992

⚠ Revised 5/19/94

DETAILED SEPT.1992
CHECKED MAY 1993

NOTE: THIS DRAWING IS NOT TO SCALE. FOLLOW DIMENSIONS.

JACKSON COUNTY

A-610R1

STATE	PROJ. NO. Job#J4I0807	SHEET NO.
MO.	F.A.I.-435-1(251)	

FINAL PLANS

FINAL PLANS

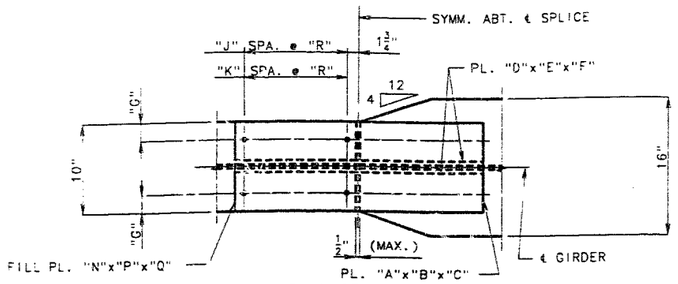

PLAN OF FLANGE
S1 & S2 (TOP)

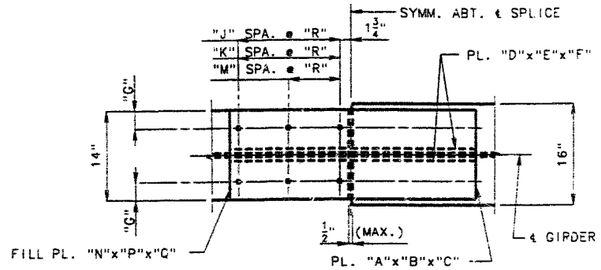

PLAN OF FLANGE
S2 (BOTT.)

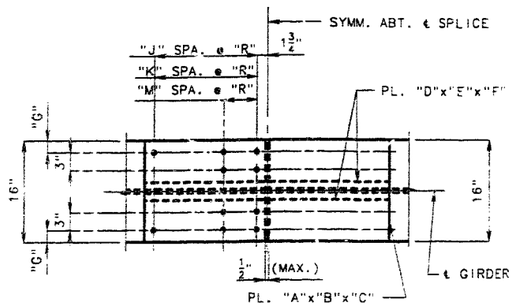

PLAN OF FLANGE
S1 (BOTT.)

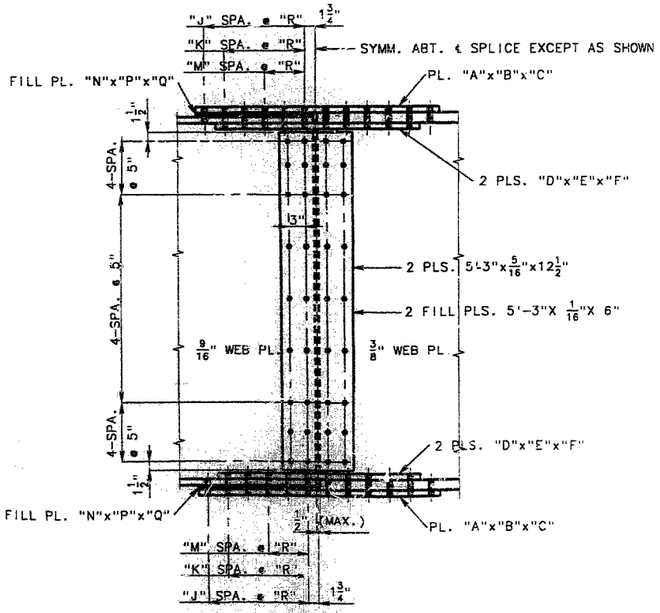

DETAIL OF BOLTED FIELD SPLICE

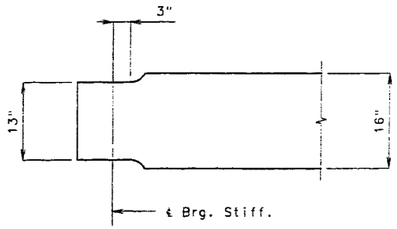

PART PLAN OF BOTTOM FLANGE
NEAR END BENTS

SPLICE LOCATION	TABLE OF DIMENSIONS–FIELD SPLICE													
	"A"	"B"	"C"	"D"	"E"	"F"	"G"	"J"	"K"	"M"	"N"	"P"	"Q"	"R"
S1 & S2 (TOP)	10"	3/8"	18 1/2"	4"	1/2	18 1/2"	2"	2	2		10"	3/8"	9"	3"
S1 BOTT.	16"	3/4"	2'-3 1/2"	7"	3/4"	2'-3 1/2"	2"	3	3	2				3 1/2"
S2 BOTT.	14"	5/8"	20 1/2"	6"	3/4"	20 1/2"	1 1/2"	2	2	1	14"	1/8"	10"	3 1/2"

NOTE: USE 7/8" Ø HIGH STRENGTH BOLTS WITH 15/16" REAMED HOLES.
CONTACT SURFACES ARE TO BE BLAST CLEANED IN ACCORDANCE WITH SECTION 712.12.2.1 OF THE STANDARD SPECIFICATIONS.
USE ONE 5'-3"X 1/16"X 6" FILL PLATE ON EACH SIDE OF 3/8" WEB.

SPL. PL., PG. 3.42, A36, 1, A
FIELD SPLICE
REVISED:
MAR. 1992

DETAILED MAY 1994
CHECKED MAY 1994

NOTE: THIS DRAWING IS NOT TO SCALE. FOLLOW DIMENSIONS.

JACKSON COUNTY

A-610R1

STATE	PROJ. NO.	SHEET NO.
MO.	J4I0087	330

FINAL PLANS

GENERAL NOTES:

THE EXPANSION DEVICE SHALL BE FABRICATED AND INSTALLED IN ACCORDANCE WITH THE RECOMMENDATIONS OF THE MANUFACTURER AND AS SET FORTH IN THE SPECIAL PROVISIONS.

THE CONTRACTOR MUST VERIFY ALL DIMENSIONS PRIOR TO FABRICATION.

ALL WELDS SHALL CONFORM TO SECTION 712 OF THE STANDARD SPECIFICATIONS.

SPLICES OF STEEL EXTRUSION SHALL DEVELOP FULL STRENGTH.

ALL STEEL SHALL BE A-36, EXCEPT STEEL EXTRUSIONS SHALL BE A.S.T.M. A-588 OR A-36.

NEOPRENE EXTRUSION SHALL MEET A.S.T.M. D-2628-69 MODIFIED (RECOVERY TEST EXCLUDED).

ANCHORS FOR EXTRUSIONS OR ARMOR SHALL BE APPROVED WELDED STUDS (C1010 THRU C1020).

PAYMENT FOR STEEL EXTRUSIONS AND NEOPRENE EXTRUSIONS SHALL BE MADE UNDER CONTRACT UNIT PRICE FOR "STRIP SEAL EXPANSION DEVICE".

PAYMENT FOR FURNISHING, PAINTING, AND PLACING STRUCTURAL STEEL PLATES SHALL BE INCLUDED IN CONTRACT UNIT PRICE FOR "STRIP SEAL EXPANSION DEVICE.

GAP DIMENSION SHALL BE INCREASED 1/16" FOR EACH 10° FALL IN TEMPERATURE AND DECREASED 1/16" FOR EACH RISE IN TEMPERATURE.

A NEOPRENE EXTRUSION CAPABLE OF PROVIDING A TOTAL MOVEMENT OF 4" SHALL BE PROVIDED.

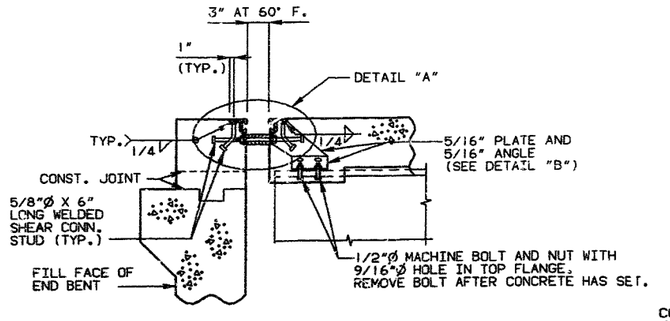

PART SECTION D-D

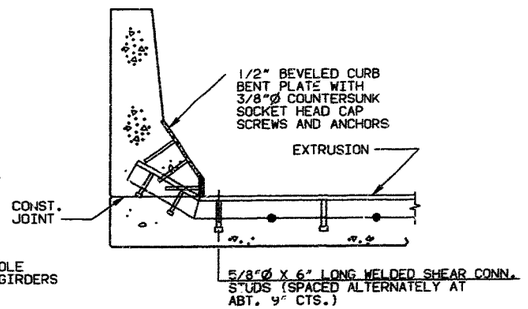

PART SECTION B-B

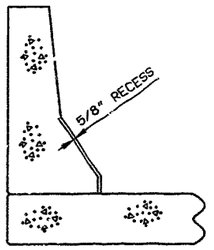

PART SECTION A-A

NOTE: FIELD DRILL 9/16"Ø HOLE IN TOP FLANGE OF EXISTING GIRDERS FOR 1/2" Ø MACHINE BOLTS.

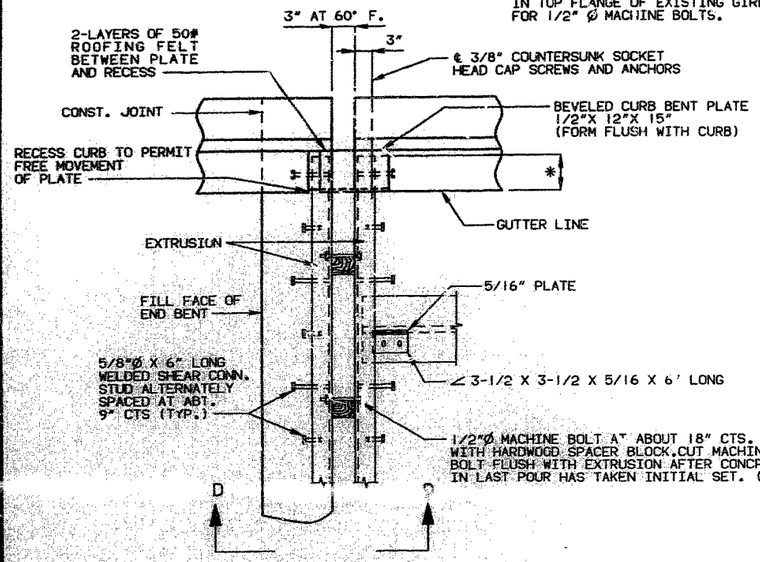

PART PLAN

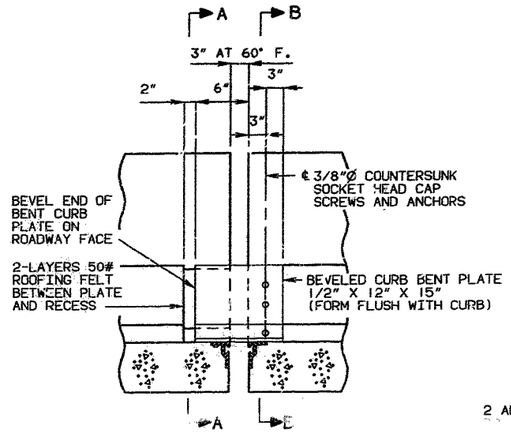

PART ELEVATION OF BARRIER CURB

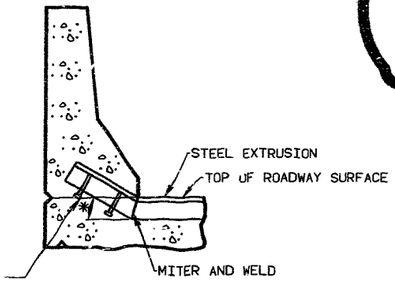

SECTION THRU SAFETY BARRIER CURB

* AS SUGGESTED BY MANUFACTURER

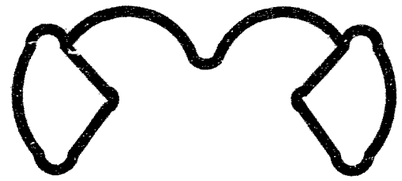

STRIP SEAL GLAND

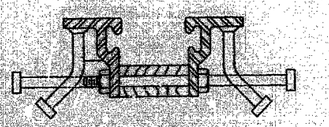

DETAIL "A"

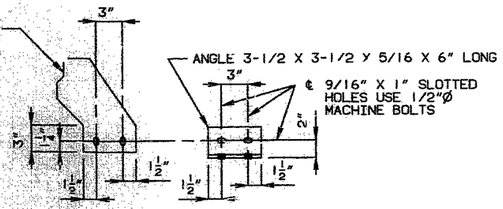

DETAIL "B"

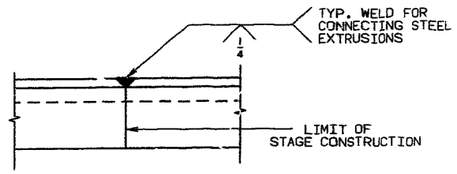

DETAIL SHOWING WELD FOR STAGE CONSTRUCTION

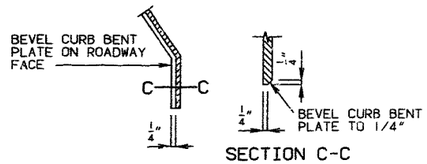

SECTION C-C

PART ELEVATION AT END OF BEVELED CURB BENT PLATE

DESIGNED	DRAWN	CHECKED	QUANTITIES CHECKED	REVISED
			OCT. 1993	MAY 1997

DETAILS OF PREFORMED COMPRESSION JOINT SEAL AT BENT NO. 1.

DETAILED SEPT. 1992
CHECKED MAY 1993

NOTE: THIS DRAWING IS NOT TO SCALE. FOLLOW DIMENSIONS.

STATE	PROJ. NO.	SHEET NO.
MO.	Job# J4I0587 F.A.I.-435-1(25D)	

FINAL PLANS

FINAL PLANS

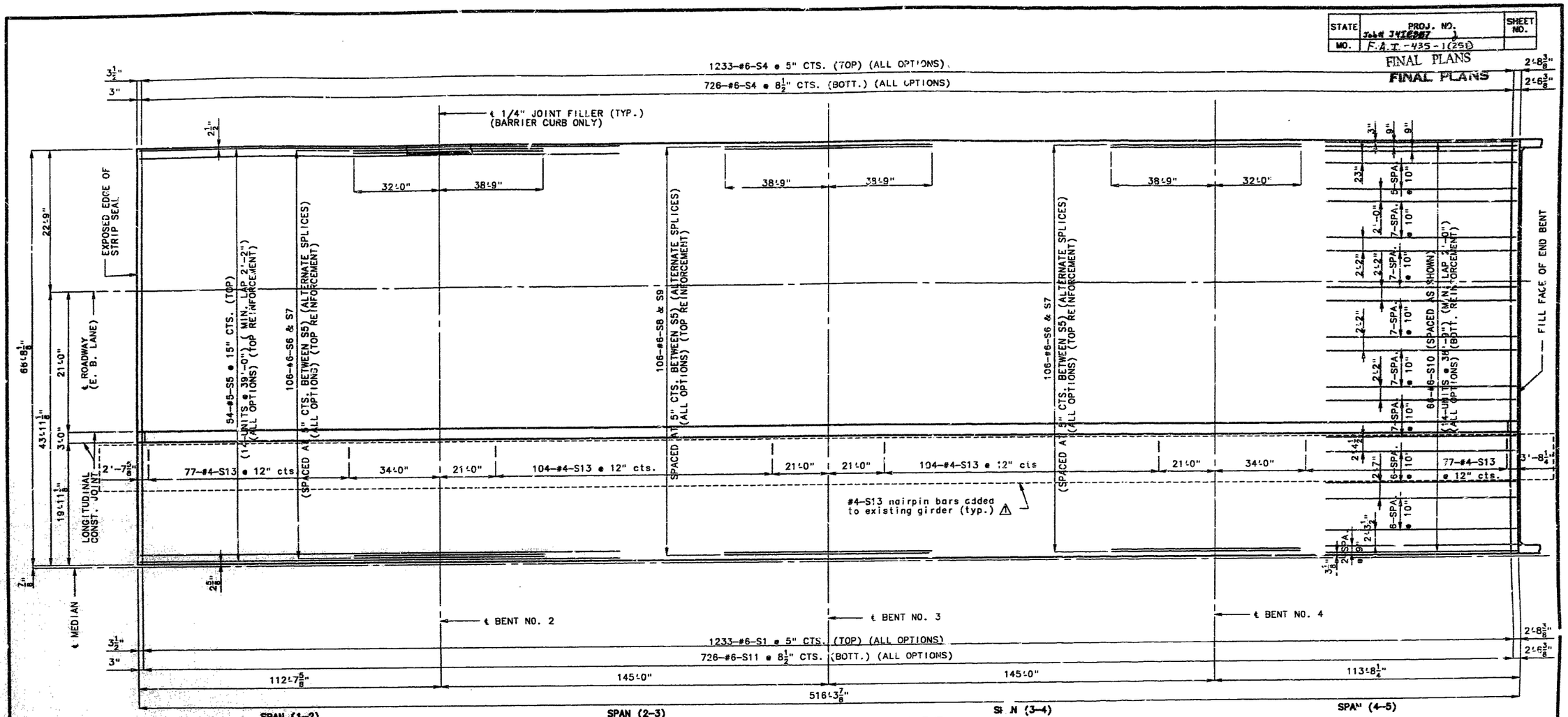

PLAN OF SLAB SHOWING REINFORCEMENT
(EAST BOUND LANE)

NOTE: LONGITUDINAL DIMENSIONS SHOWN ARE TAKEN ALONG TOP EDGE OF SLAB PARALLEL TO GRADE.
FOR DETAILS AND REINFORCEMENT OF SAFETY BARRIER CURB NOT SHOWN SEE SHEETS NO. 40, 41, 42, 43, 44 & 45.
FOR GIRDER CAMBER DIAGRAM AND THEORETICAL SLAB HAUNCHING DIAGRAM SEE SHEET NO. 37.
FOR SLAB POURING SEQUENCE SEE SHEET NO. 36.
FOR DETAILS OF SLAB DRAINS SEE SHEET NO. 39.
FOR PART SECTION THRU SLAB SHOWING S-I-P OPTION SEE SHEET NO. 36.

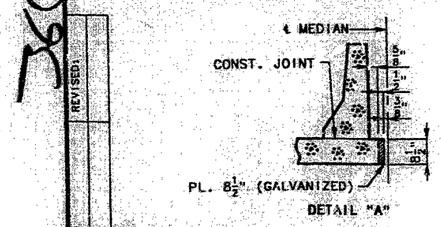

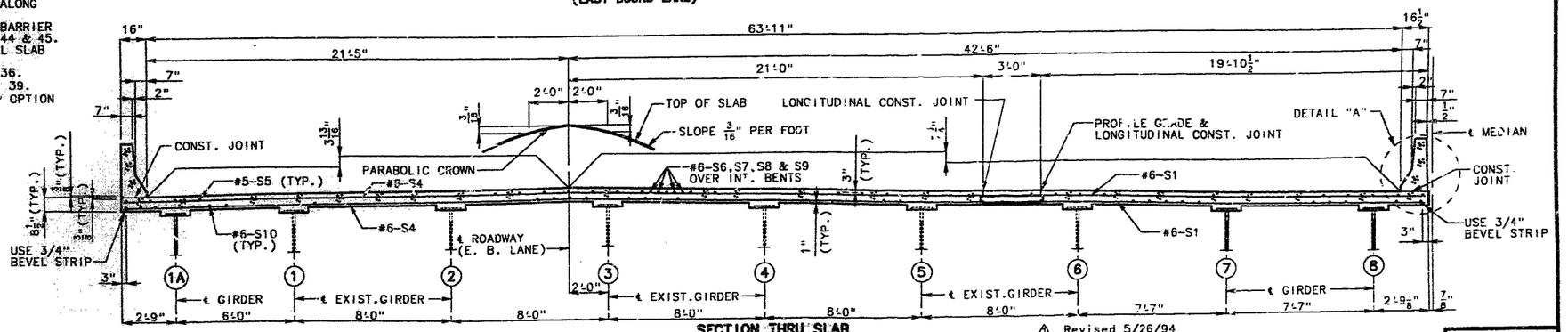

SECTION THRU SLAB
(C. I. P. OPTION)

⚠ Revised 5/26/94

SHEET NO. 34 OF 51.

JACKSON COUNTY

A-610R1

REVISED

DETAILED SEPT. 1992
CHECKED MAY 1993

NOTE: THIS DRAWING IS NOT TO SCALE. FOLLOW DIMENSIONS.

STATE	PROJ. NO.	SHEET NO.
MO.	Job# J4I0887 F.A.I.-435-1(251)	

FINAL PLANS

FINAL PLANS

1233-#6-S1 @ 5" CTS. (TOP) (ALL OPTIONS)
726-#6-S11 @ $8\frac{1}{2}$" CTS. (BOTT.) (ALL OPTIONS)

℄ 1/4" JOINT FILLER (TYP.) (BARRIER CURB ONLY)

#4-S13 hairpin bars added to existing girder (typ.) ⚠

77-#4-S13 @ 12" cts.

63-#5-S5 @ 15" CTS. (TOP) (14-UNITS @ 39'-0") (MIN. LAP 21'-2") (ALL OPTIONS) (TOP REINFORCEMENT)

124-#6-S6 & S7 5" CTS. BETWEEN S5 (ALTERNATE SPLICES) (ALL OPTIONS) (TOP REINFORCEMENT)

124-#6-S8 & S9 (SPACED AT 5" CTS. BETWEEN S5) (ALTERNATE SPLICES) (ALL OPTIONS) (TOP REINFORCEMENT)

124-#6-S6 & S7 (SPACED AT 5" CTS. BETWEEN S5) (ALTERNATE SPLICES) (ALL OPTIONS) (TOP REINFORCEMENT)

1233-#6-S2 @ 5" CTS. (TOP) (ALL OPTIONS)
726-#6-S12 @ $8\frac{1}{2}$" CTS. (BOTT.) (ALL OPTIONS)

78-#6-S10 (SPACED AS SHOWN) (14-UNITS @ 38'-9") (MIN. LAP 2'-0") (ALL OPTIONS) (BOTT. REINFORCEMENT)

℄ MEDIAN
℄ ROADWAY (W. B. LANE)
LONGITUDINAL CONST. JOINT
EXPOSED EDGE OF STRIP SEAL
FILL FACE OF END BENT

℄ BENT NO. 2
℄ BENT NO. 3
℄ BENT NO. 4

1233-#6-S3 @ 5" CTS. (TOP) (ALL OPTIONS)
726-#6-S3 @ $8\frac{1}{2}$" CTS. (BOTT.) (ALL OPTIONS)

SPAN (1-2) SPAN (2-3) SPAN (3-4) SPAN (4-5)

PLAN OF SLAB SHOWING REINFORCEMENT (WEST BOUND LANE)

NOTE: FOR DETAILS AND REINFORCEMENT OF SAFETY BARRIER CURB NOT SHOWN SEE SHEETS NO. 40,41,42,43,44 & 45.
FOR GIRDER CAMBER DIAGRAM AND THEORETICAL SLAB HAUNCHING DIAGRAM SEE SHEET NO. 38.
FOR SLAB POURING SEQUENCE SEE SHEET NO. 36.
FOR PART SECTION THRU SLAB SHOWING S-I-P OPTION SEE SHEET NO. 36.

NOTE: FOR DETAILS OF SLAB DRAINS SEE SHEET NO. 39.

NOTE: LONGITUDINAL DIMENSIONS SHOWN ARE TAKEN ALONG TOP EDGE OF SLAB PARALLEL TO GRADE.

361

REVISED:

DETAIL "A"

℄ MEDIAN
CONST. JOINT
USE 3/4" BEVEL STRIP
PL. $8\frac{1}{2}$" (GALVANIZED)

DETAILED SEPT. 1992
CHECKED MAY 1993

PROFILE GRADE & LONGITUDINAL CONST. JOINT
DETAIL "A"
#5-S5 (TYP.)
#6-S1
#6-S10 (TYP.)
#6-S6,S7,S8 & S9 OVER INT. BENTS
#6-S2
PARABOLIC CROWN
TOP OF SLAB
SLOPE $\frac{3}{16}$" PER FOOT
LONG. CONST. JOINT
#6-S3
CONST. JOINT
USE 3/4" BEVEL STRIP
LONGITUDINAL CONST. JOINT
℄ ROADWAY (W.B. LANE)
℄ GIRDER
℄ EXIST. GDR.

SECTION THRU SLAB (C. I. P. OPTION)

NOTE: THIS DRAWING IS NOT TO SCALE. FOLLOW DIMENSIONS.

⚠ Revised 5/26/94

JACKSON COUNTY

A-610R1

STATE	PROJ. NO. Job # J1I0067	SHEET NO.
MO.	F.A.T.-435-(251)	

FINAL PLANS

FINAL PLANS

Added ⚠

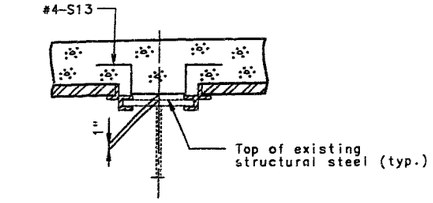

SECTION THRU HAUNCH

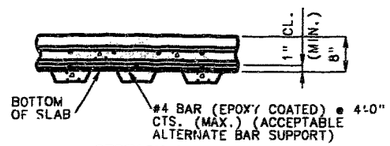

SECTION A-A

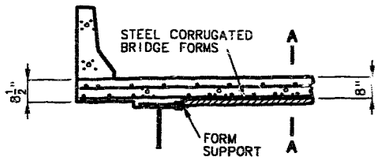

PART SECTION THRU SLAB (S-I-P OPTION)

NOTE: S-I-P OPTION IS SAME AS C-I-P OPTION EXCEPT AS SHOWN.

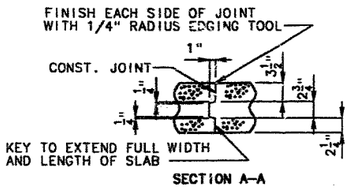

SECTION A-A

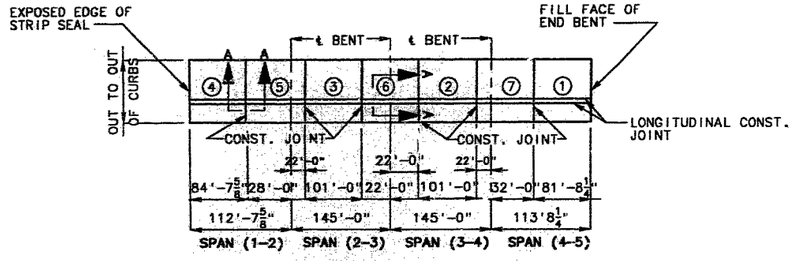

	SEQUENCE OF POURS							MIN. RATE OF POUR CU. YDS./HR.
	DIRECTION							WITH RETARDER
BASIC SEQUENCE	1	2	3	4	5	6	7	25
	EITHER DIRECTION							
ALTERNATE POURS TO THE BASIC SKIP SEQUENCE ARE SUBJECT TO THE APPROVAL OF THE ENGINEER IN ACCORDANCE WITH SECTION 703.3.12.4 OF MISSOURI STANDARD SPECIFICATIONS.								
ALTERNATE "A" POURS	1	7 + 2		6 + 3		5 + 4		54
	END TO 7	1 TO 6		2 TO 5		3 TO END		
ALTERNATE "B" POURS	1 + 7 + 2			6 + 3		5 + 4		54
	END TO 6			2 TO 5		3 TO END		
ALTERNATE "C" POURS	1 + 7 + 2			6 + 3 + 5 + 4				54
	END TO 6			2 TO END				
ALTERNATE "D" POURS	1 + 7 + 2 + 6 + 3 + 5 + 4							54
	END TO END							

SLAB POURING SEQUENCE
(EAST BOUND LANE)

NOTE: THE CONTRACTOR SHALL POUR AND SATISFACTORILY FINISH THE SLAB POURS AT THE RATE GIVEN. RETARDER, SHALL BE AN APPROVED TYPE AND RETARD THE SET OF CONCRETE TO 2.5 HOURS.

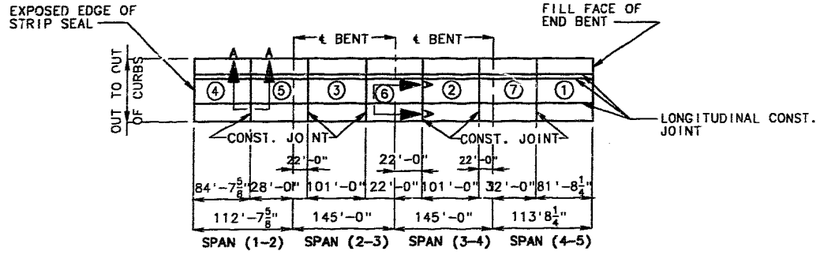

	SEQUENCE OF POURS							MIN. RATE OF POUR CU. YDS./HR.	
	DIRECTION							WITH RETARDER	NO RETARDER
BASIC SEQUENCE	1	2	3	4	5	6	7	25	25
	EITHER DIRECTION								
ALTERNATE POURS TO THE BASIC SKIP SEQUENCE ARE SUBJECT TO THE APPROVAL OF THE ENGINEER IN ACCORDANCE WITH SECTION 703.3.12.4 OF MISSOURI STANDARD SPECIFICATIONS.									
ALTERNATE "A" POURS	1	7 + 2		6 + 3		5 + 4		37	61
	END TO 7	1 TO 6		2 TO 5		3 TO END			
ALTERNATE "B" POURS	1 + 7 + 2			6 + 3		5 + 4		37	61
	END TO 6			2 TO 5		3 TO END			
ALTERNATE "C" POURS	1 + 7 + 2			6 + 3 + 5 + 4				37	61
	END TO 6			2 TO END					
ALTERNATE "D" POURS	1 + 7 + 2 + 6 + 3 + 5 + 4							37	61
	END TO END								

SLAB POURING SEQUENCE
(WEST BOUND LANE)

NOTE: THE CONTRACTOR SHALL POUR AND SATISFACTORILY FINISH THE SLAB POURS AT THE RATE GIVEN. RETARDER, IF USED SHALL BE AN APPROVED TYPE AND RETARD THE SET OF CONCRETE TO 2.5 HOURS.

⚠ Revised 5/26/94

262

REVISED

DETAILED SEPT. 1992
CHECKED JUNE 1993

NOTE: THIS DRAWING IS NOT TO SCALE. FOLLOW DIMENSIONS.

STATE	PROJ. NO. Job# J4[illegible]	SHEET NO.
MO.	F.A.I.-435-1(25D)	

FINAL PLANS

See sheet no. 37A for camber diagram (east bound lane) △1

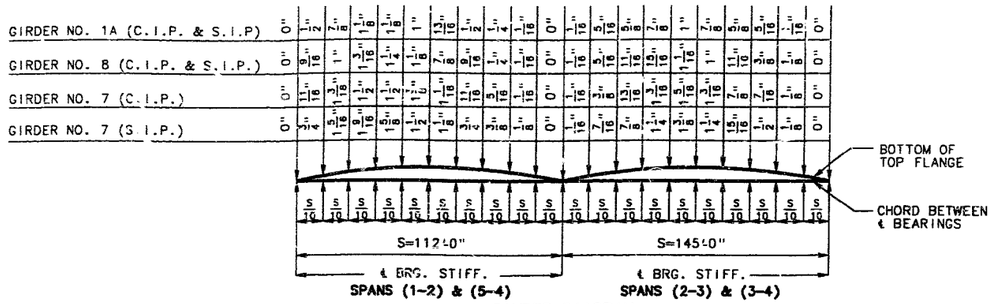

CAMBER DIAGRAM
(EAST BOUND LANE)

NOTE: CAMBER INCLUDES ALLOWANCE FOR DEAD LOAD DEFLECTION DUE TO CONCRETE SLAB, CURB AND STRUCTURAL STEEL.
15% OF DEAD LOAD DEFLECTION IS DUE TO THE WEIGHT OF STRUCTURAL STEEL.

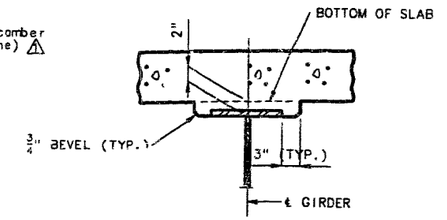

THEORETICAL SLAB HAUNCH
GIRDERS NO. 1A, 7 & 8 (C.I.P & S.I.P.)
(EAST BOUND LANE)

NOTE: 2" DIMENSION MAY VARY IF GIRDER CAMBER AFTER ERECTION DIFFERS FROM PLAN CAMBER BY MORE THAN THE % OF D. L. DEFLECTION DUE TO WEIGHT OF STRUCTURAL STEEL. NO PAYMENT WILL BE MADE FOR ADDITIONAL FORMING OR CONCRETE REQUIRED FOR VARIATION IN HAUNCHING.

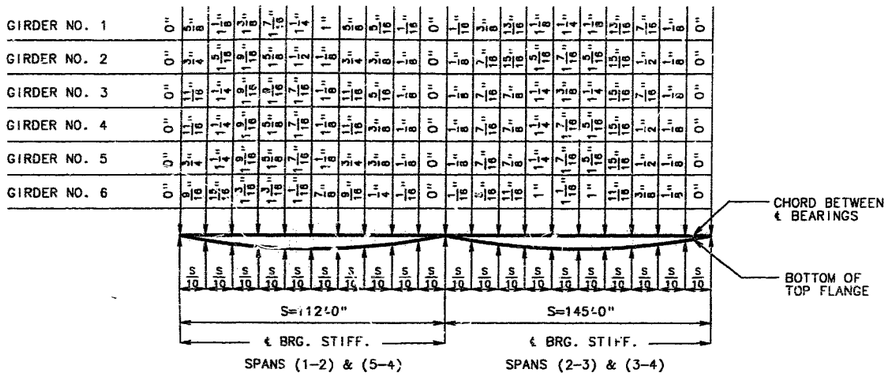

DEAD LOAD DEFLECTIONS (C.I.P.)
(EAST BOUND LANE)

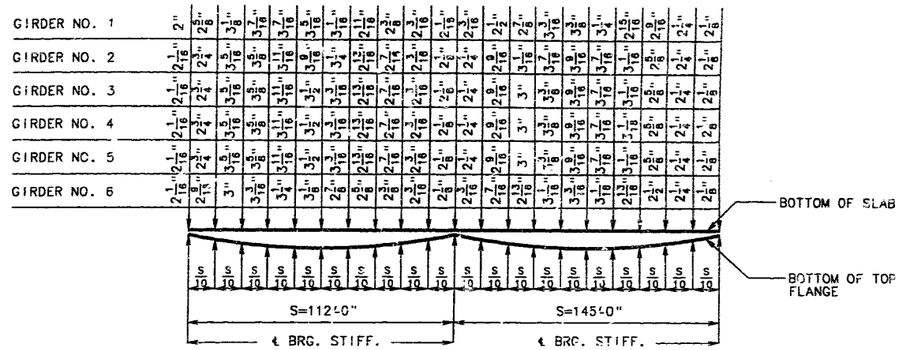

THEORETICAL SLAB HAUNCHING DIAGRAM (C.I.P.)
(EAST BOUND LANE)

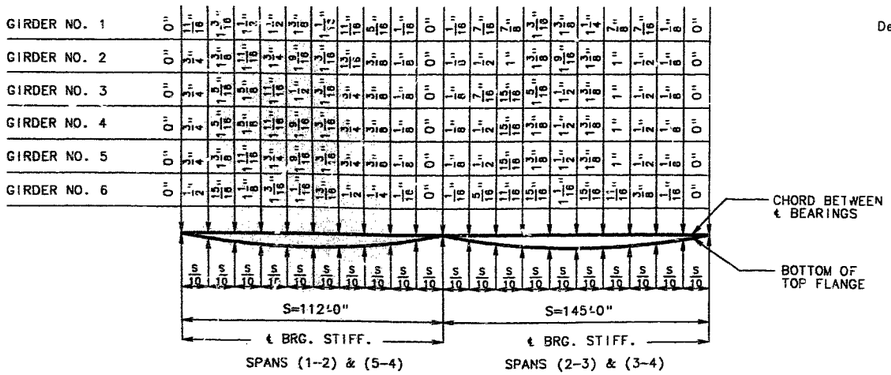

DEAD LOAD DEFLECTIONS (S.I.P.)
(EAST BOUND LANE)

Delete △2

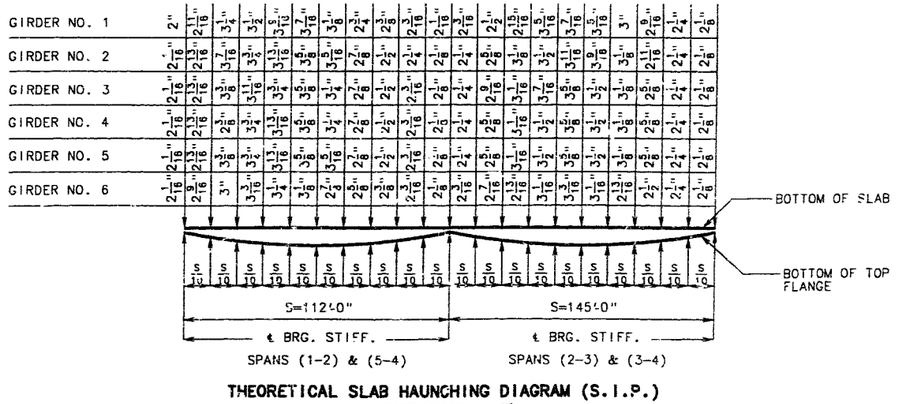

THEORETICAL SLAB HAUNCHING DIAGRAM (S.I.P.)
(EAST BOUND LANE)

TO DETERMINE THE HAUNCH FOR THE STAY-IN-PLACE ALTERNATE, ADD 1/2" TO THE HAUNCH FOR THE CAST-IN-PLACE ALTERNATE.

△1 Revised 5/19/94
△2 Revised 5/26/94

REVISED:

DETAILED SEPT. 1992
CHECKED MAY 1993

NOTE: THIS DRAWING IS NOT TO SCALE. FOLLOW DIMENSIONS.

SHEET NO. 37 OF 51.

JACKSON COUNTY

A-610R1

363

STATE	PROJ. NO. Job# J4I0887	SHEET NO.
MO.	F.A.I.-435-1(251)	

FINAL PLANS

FINAL PLANS

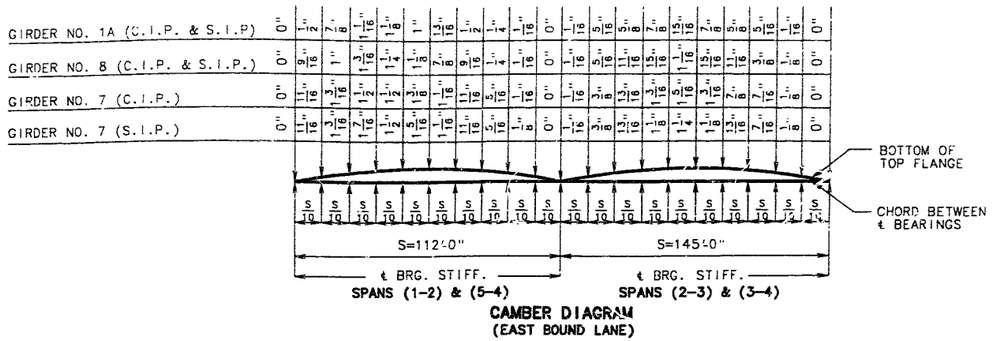

CAMBER DIAGRAM
(EAST BOUND LANE)

NOTE: CAMBER INCLUDES ALLOWANCE FOR DEAD LOAD DEFLECTION DUE TO CONCRETE SLAB, CURB AND STRUCTURAL STEEL.
15% OF DEAD LOAD DEFLECTION IS DUE TO THE WEIGHT OF STRUCTURAL STEEL.

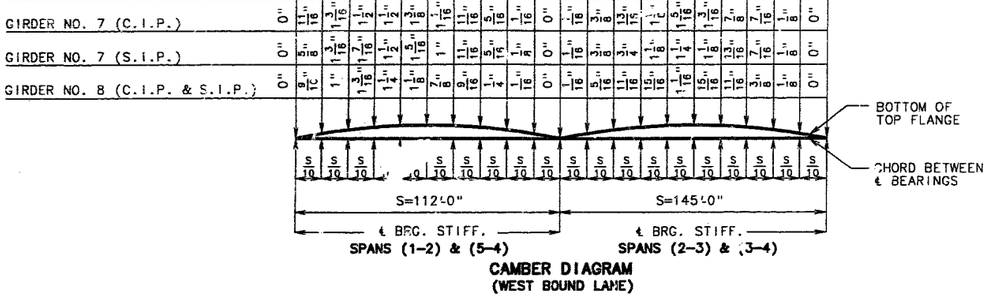

CAMBER DIAGRAM
(WEST BOUND LANE)

NOTE: CAMBER INCLUDES ALLOWANCE FOR DEAD LOAD DEFLECTION DUE TO CONCRETE SLAB, CURB AND STRUCTURAL STEEL.
13% OF DEAD LOAD DEFLECTION IS DUE TO THE WEIGHT OF STRUCTURAL STEEL.

37A

REVISED:

DETAILED MAY 1994
CHECKED MAY 1994

NOTE. THIS DRAWING IS NOT TO SCALE. FOLLOW DIMENSIONS.

STATE	PROJ. NO.	SHEET NO.
MO.	Job # J4I0867 F.A.I.-435-1(251)	

FINAL PLANS

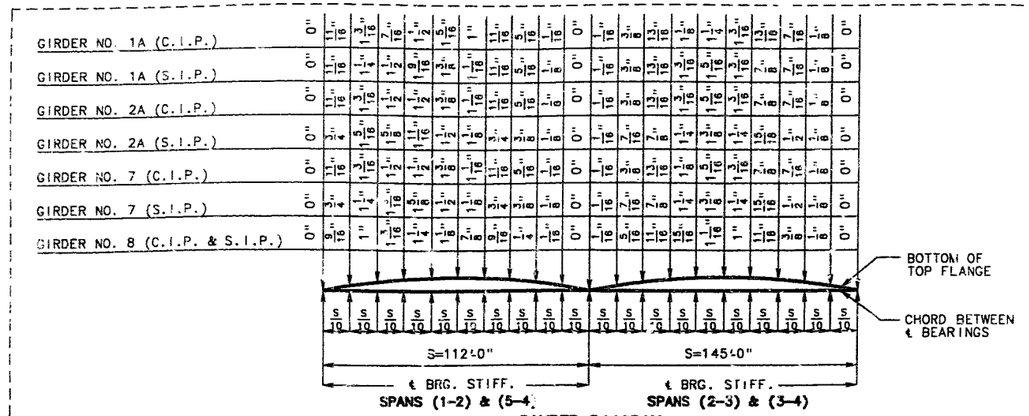

CAMBER DIAGRAM
(WEST BOUND LANE)

NOTE: CAMBER INCLUDES ALLOWANCE FOR DEAD LOAD DEFLECTION DUE TO CONCRETE SLAB, CURB AND STRUCTURAL STEEL.
13% OF DEAD LOAD DEFLECTION IS DUE TO THE WEIGHT OF STRUCTURAL STEEL.

See sheet no. 37A for camber diagram (east bound lane) ⚠

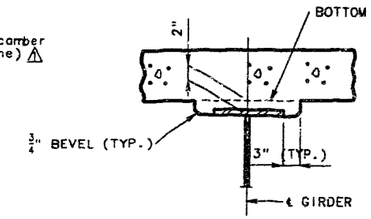

THEORETICAL SLAB HAUNCH
GIRDERS NO. 1A, 2A, 7 & 8 (C.I.P. & S.I.P.)
(WEST BOUND LANE)

NOTE: 2" DIMENSION MAY VARY IF GIRDER CAMBER AFTER ERECTION DIFFERS FROM PLAN CAMBER BY MORE THAN THE ½ OF D. L. DEFLECTION DUE TO WEIGHT OF STRUCTURAL STEEL. NO PAYMENT WILL BE MADE FOR ADDITIONAL FORMING OR CONCRETE REQUIRED FOR VARIATION IN HAUNCHING.

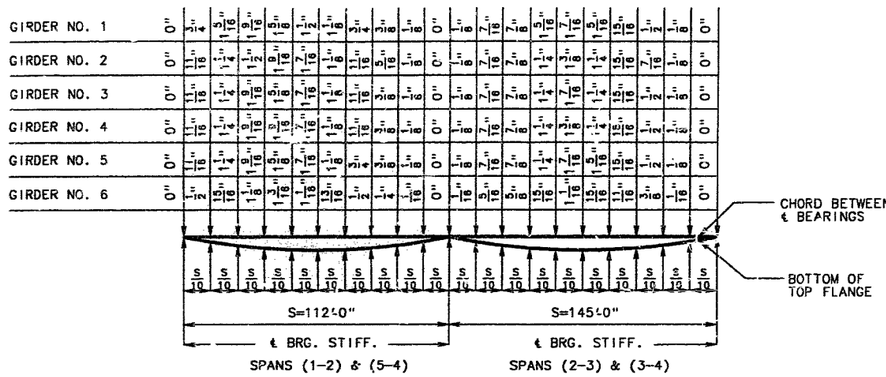

DEAD LOAD DEFLECTIONS (C.I.P.)
(WEST BOUND LANE)

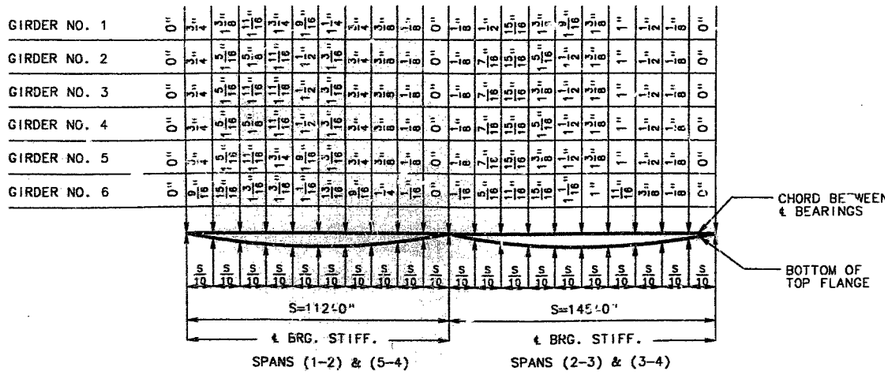

DEAD LOAD DEFLECTIONS (S.I.P.)
(WEST BOUND LANE)

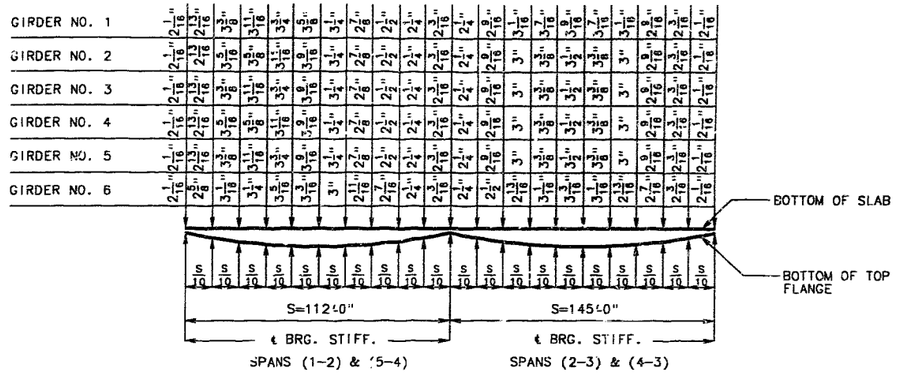

THEORETICAL SLAB HAUNCHING DIAGRAM (C.I.P.)
(WEST BOUND LANE)

Delete ⚠

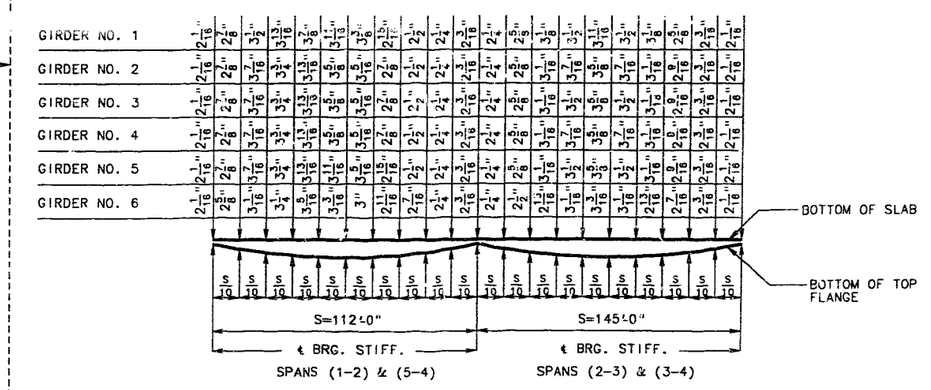

THEORETICAL SLAB HAUNCHING DIAGRAM (S.I.P.)
(WEST BOUND LANE)

TO DETERMINE THE HAUNCH FOR THE STAY-IN-PLACE ALTERNATE, ADD 1/2" TO THE HAUNCH FOR THE CAST-IN-PLACE ALTERNATE.

⚠ Revised 5/19/94
⚠ Revised 5/26/94

REVISED!

DETAILED SEPT. 1992
CHECKED MAY 1993

NOTE: THIS DRAWING IS NOT TO SCALE. FOLLOW DIMENSIONS.

STATE	PROJ. NO.	SHEET NO.
MO.	J4I0807	337

FINAL PLANS

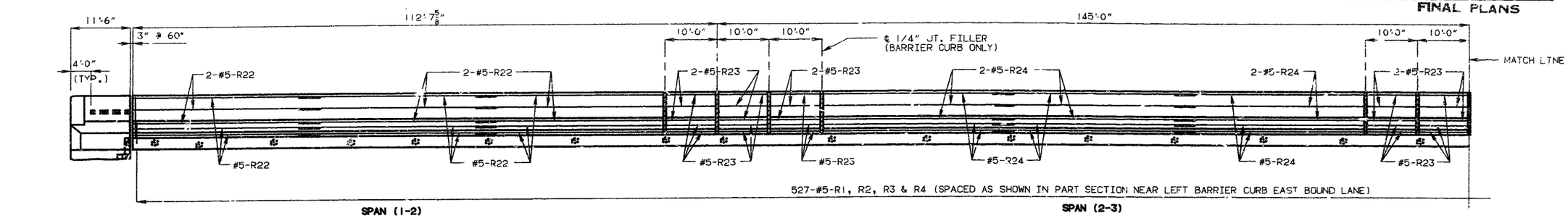

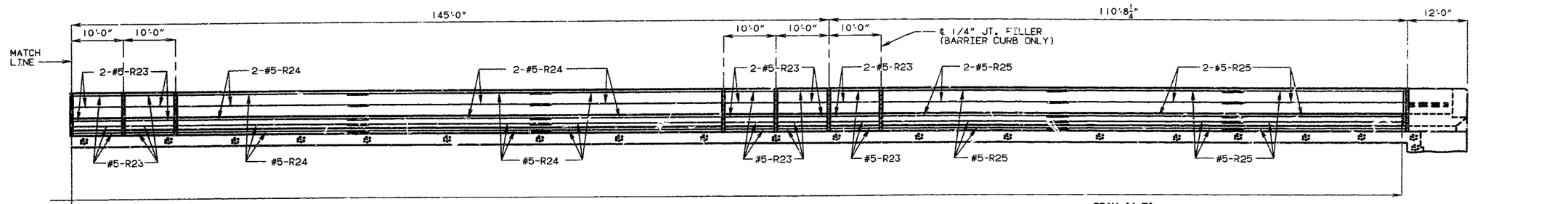

SECTION NEAR LEFT BARRIER CURB (EAST BOUND LANE)

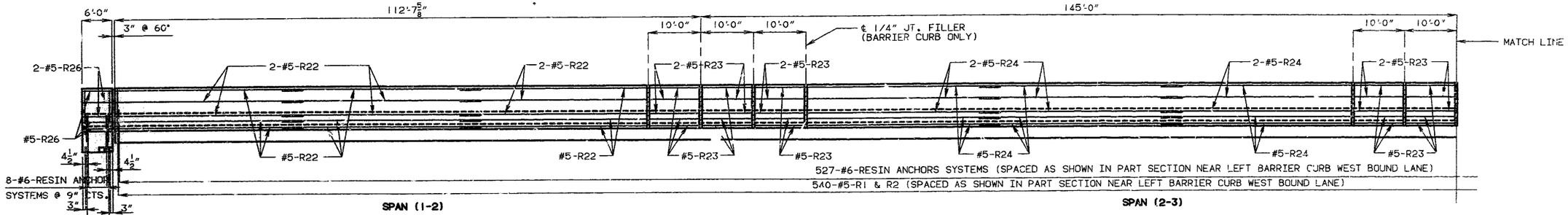

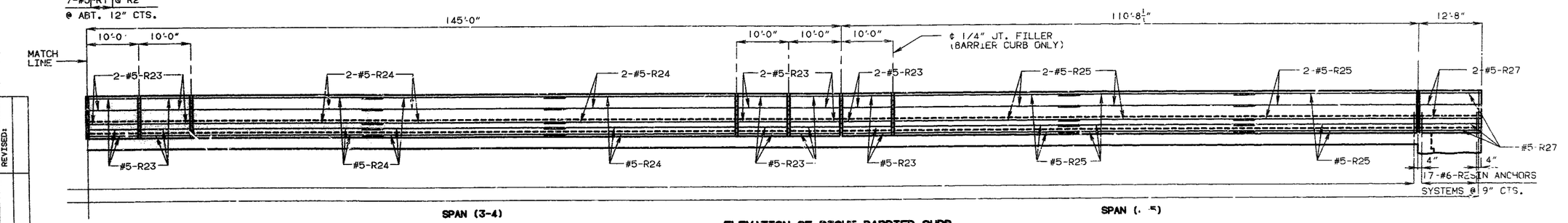

ELEVATION OF RIGHT BARRIER CURB (EAST BOUND LANE)

NOTE: FOR PART SECTION NEAR BARRIER CURB, SECTION THRU WING AT END BENT NO. 1 AND NO. 5 AND DETAILS OF BARRIER CURB NOT SHOWN SEE SHEET NO. 42.
FOR DETAILS SHOWING WING REINFORCEMENT SEE SHEET NO. 43.

NOTE: LONGITUDINAL DIMENSIONS SHOWN ARE TAKEN ALONG TOP EDGE OF SLAB PARALLEL TO GRADE.

NOTE: THIS DRAWING IS NOT TO SCALE. FOLLOW DIMENSIONS.

REVISED:

DETAILED SEPT. 1992
CHECKED JUNE 1993

STATE	PROJ. NO.	SHEET NO.
MO.	J4I0B07	338

FINAL PLANS

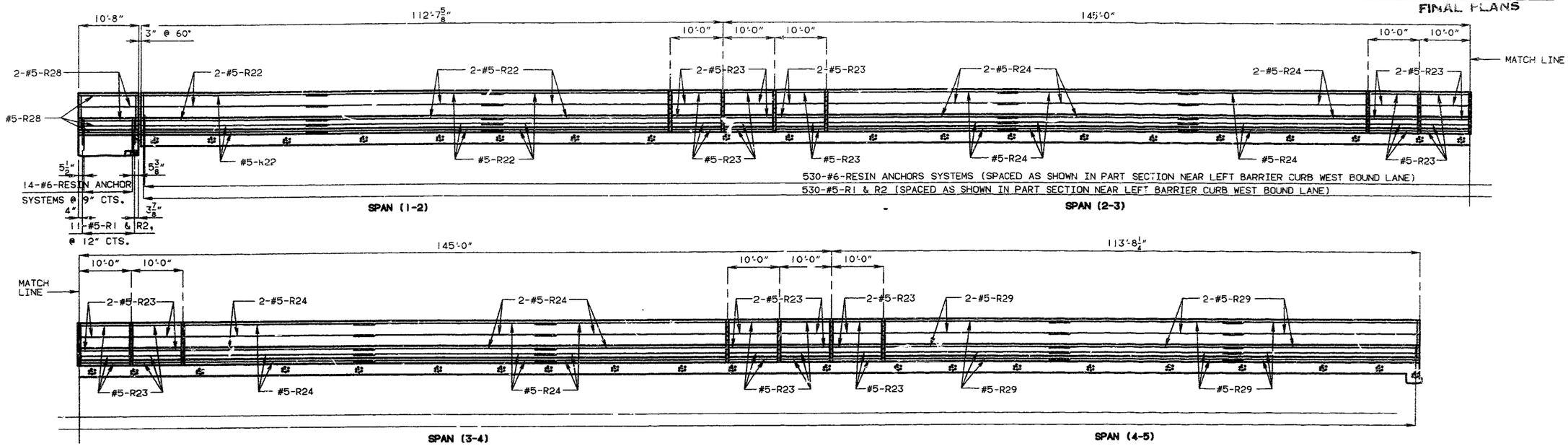

SECTION NEAR LEFT BARRIER CURB
(WEST BOUND LANE)

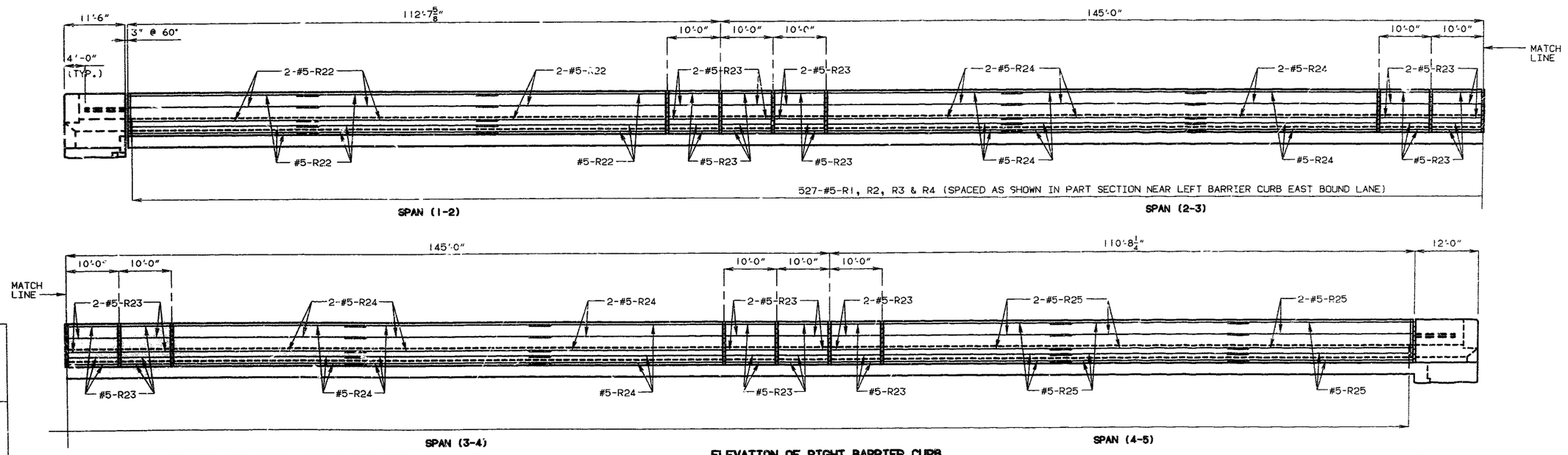

ELEVATION OF RIGHT BARRIER CURB
(WEST BOUND LANE)

NOTE: FOR PART SECTION NEAR BARRIER CURB, SECTION THRU WING AT END BENT NO. 1 AND NO. 5 AND DETAILS OF BARRIER CURB NOT SHOWN SEE SHEET NO. 42.
FOR DETAILS SHOWING WING REINFORCEMENT SEE SHEET NO. 43.

NOTE: LONGITUDINAL DIMENSIONS SHOWN ARE TAKEN ALONG TOP EDGE OF SLAB PARALLEL TO GRADE.

REVISED:

DETAILED SEPT. 1992
CHECKED JUNE 1993

NOTE: THIS DRAWING IS NOT TO SCALE. FOLLOW DIMENSIONS.

STATE	PROJ. NO.	SHEET NO.
MD.	J4IØBØ7	339

FINAL PLANS

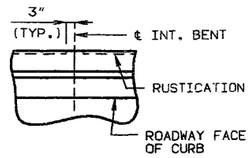

PART PLAN SHOWING RUSTICATION DETAILS

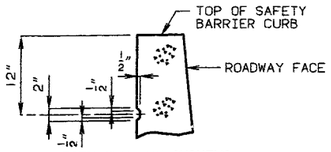

PART SECTION SHOWING RUSTICATION DETAILS

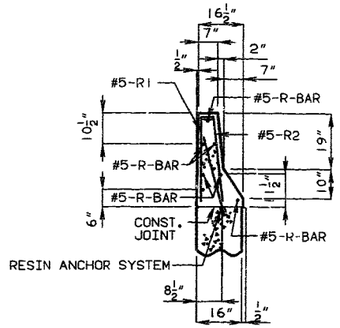

SECTION THRU WING END BENT NO. 1
RIGHT BARRIER CURB (EAST BOUND LANE),
LEFT BARRIER CURB (WEST BOUND LANE)
& SECTION THRU WING END BENT NO. 5
RIGHT BARRIER CURB (EAST BOUND LANE)

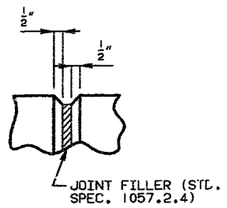

FILLED JOINT DETAIL

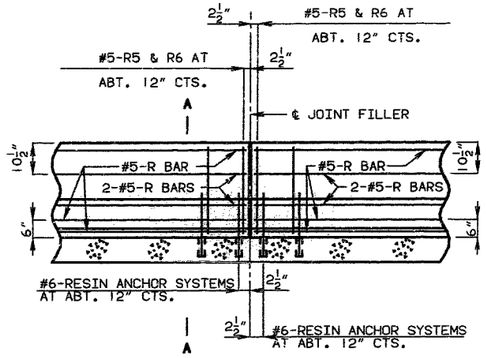

PART SECTION NEAR LEFT SAFETY BARRIER CURB
WEST BOUND LANE
(CAST-IN-PLACE CONVENTIONAL FORMING OPTION)

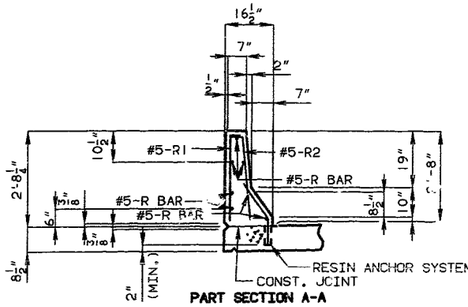

PART SECTION A-A

NOTE: USE A MINIMUM LAP OF 17" FOR #5 HORIZONTAL SAFETY BARRIER CURB BARS.
THE CROSS-SECTIONAL AREA ABOVE THE SLAB = 2.27 SQ. FT.

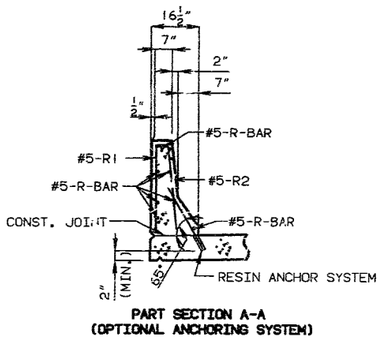

PART SECTION A-A
(OPTIONAL ANCHORING SYSTEM)

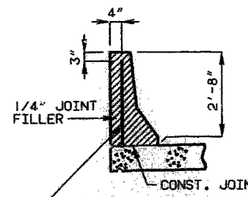

NOTE: PLASTIC WATERSTOP SHALL BE PLACED IN ALL SAFETY BARRIER CURB FILLED JOINTS. (EXCEPT STRUCTURES WITH SUPERELEVATION, USE ON ALL LOWER SAFETY BARRIER CURB JOINTS ONLY).

COST OF PLASTIC WATERSTOP COMPLETE IN PLACE TO BE INCLUDED IN CONTRACT UNIT PRICE FOR SAFETY BARRIER CURB.

DETAILS OF PLASTIC WATERSTOP

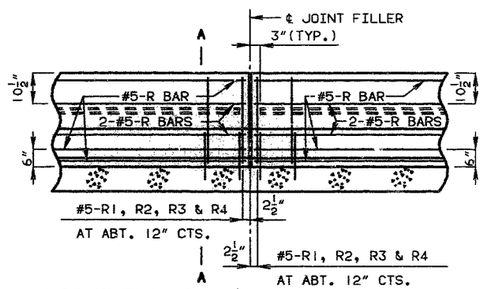

PART SECTION NEAR LEFT SAFETY BARRIER CURB
EAST BOUND LANE
(CAST-IN-PLACE CONVENTIONAL FORMING OPTION)

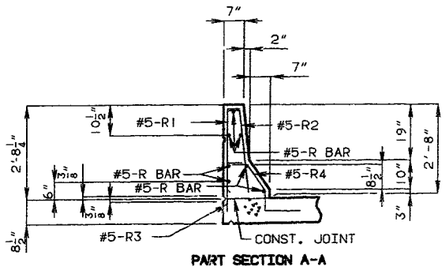

PART SECTION A-A

NOTE: USE A MINIMUM LAP OF 17" FOR #5 HORIZONTAL SAFETY BARRIER CURB BARS.
THE CROSS-SECTIONAL AREA ABOVE THE SLAB = 2.27 SQ. FT.

NOTE:

TOP OF SAFETY BARRIER CURB SHALL BE BUILT PARALLEL TO GRADE WITH SAFETY BARRIER CURB JOINTS (EXCEPT AT END BENTS) NORMAL TO GRADE.

ALL EXPOSED EDGES OF SAFETY BARRIER CURB SHALL HAVE EITHER A 1/2" RADIUS OR A 3/8" BEVEL, UNLESS OTHERWISE NOTED.

WHEN THE SAFETY BARRIER CURB IS BID BY LINEAR FEET, THE CONTRACT UNIT PRICE SHALL INCLUDE THE COST OF ALL CONCRETE AND REINFORCEMENT, COMPLETE-IN-PLACE.

CONCRETE IN THE SAFETY BARRIER CURB SHALL BE CLASS B1.

MEASUREMENT OF SAFETY BARRIER CURB IS TO THE NEAREST LINEAR FOOT FOR EACH STRUCTURE, MEASURED ALONG THE OUTSIDE TOP OF SLAB FROM END OF WING TO END OF WING.

THE CONTRACTOR SHALL USE ONE OF THE RESIN ANCHOR SYSTEMS LISTED IN THE JOB SPECIAL PROVISIONS FOR THE SAFETY BARRIER CURB.

COST OF FURNISHING AND INSTALLING THE ANCHOR SYSTEM COMPLETE IN PLACE SHALL BE INCLUDED IN THE PRICE BID PER LINEAR FOOT OF SAFETY BARRIER CURB.

364 368

B/C EL 16,68 3.30, , 1A
BARRIER CURB ELEVATION REVISED! FEB. 1993
JAN. 1990

DETAILED SEPT. 1992
CHECKED JUNE 1993

NOTE: THIS DRAWING IS NOT TO SCALE. FOLLOW DIMENSIONS.

STATE	PROJ. NO.	SHEET NO.
MO.	J4I0807	340

FINAL PLANS

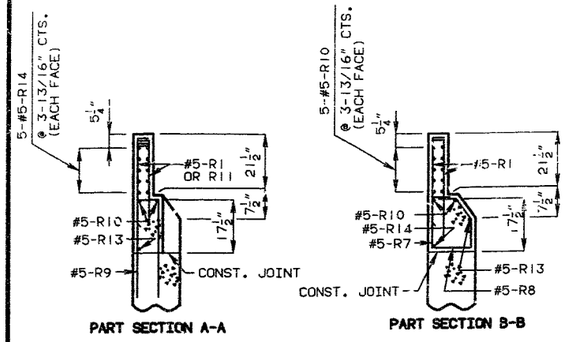

PART SECTION A-A

PART SECTION B-B

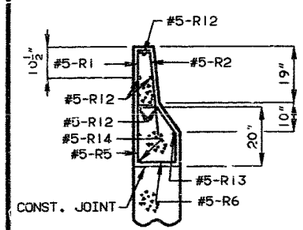

PART SECTION C-C

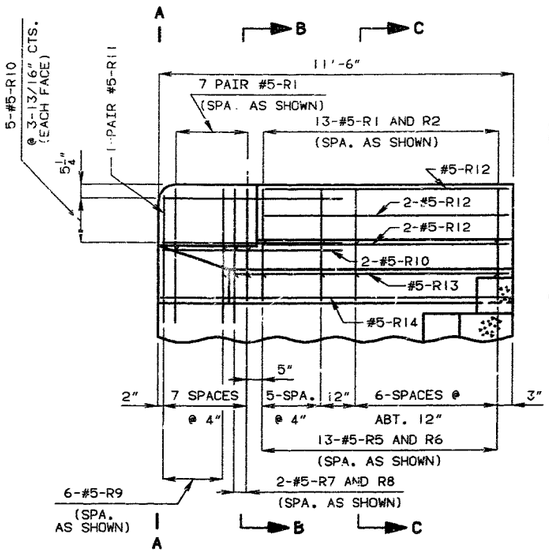

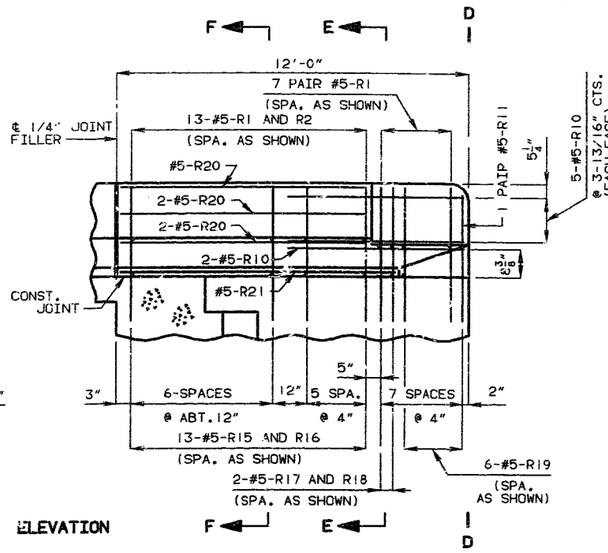

ELEVATION

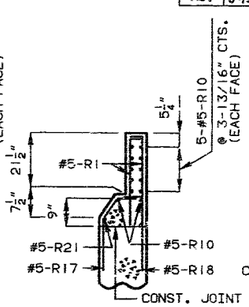

PART SECTION E-E

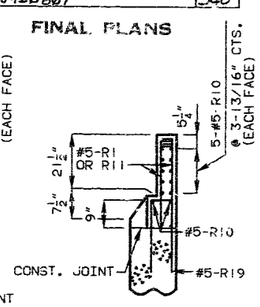

PART SECTION D-D

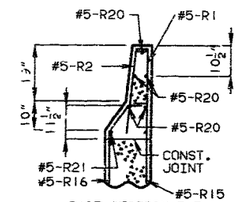

PART SECTION F-F

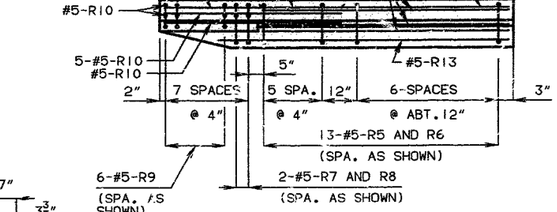

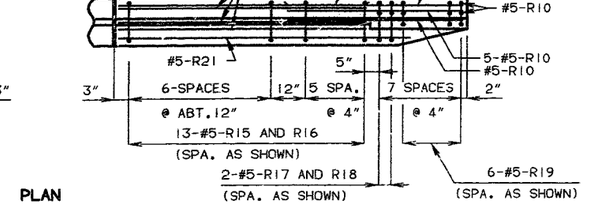

PLAN

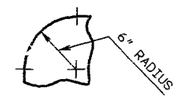

DETAIL "F" (TYPICAL)

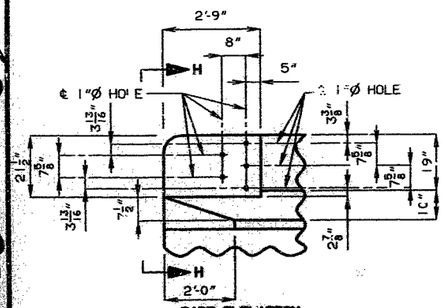

PART ELEVATION

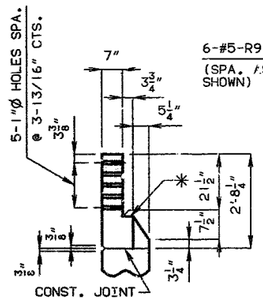

PART ELEVATION H-H

* SLOPE 1/4" TOWARD ROADWAY

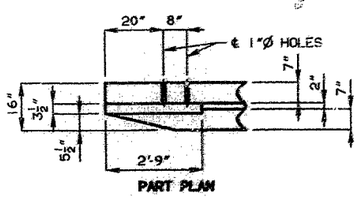

PART PLAN

DETAILS OF GUARD RAIL ATTACHMENT

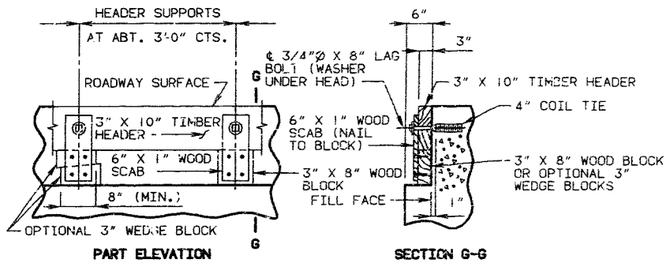

PART ELEVATION

SECTION G-G

NOTE: COST OF TIMBER HEADERS COMPLETE IN PLACE TO BE INCLUDED IN CONTRACT UNIT PRICE FOR CONCRETE.

DETAILS OF TIMBER HEADER AT END BENTS

DETAILS OF SAFETY BARRIER CURB AT END BENTS

3/C EP16,GS 3.30,INT, ,A
INT-END POST (16")
AUG. 1978
REVISED
MARCH 1992

DETAILED SEPT. 1992
CHECKED JUNE 1993

NOTE: THIS DRAWING IS NOT TO SCALE. FOLLOW DIMENSIONS.

JACKSON COUNTY

A-6I0RI

STATE	PROJ. NO.	SHEET NO.
MO.	J4I0807	341

FINAL PLANS

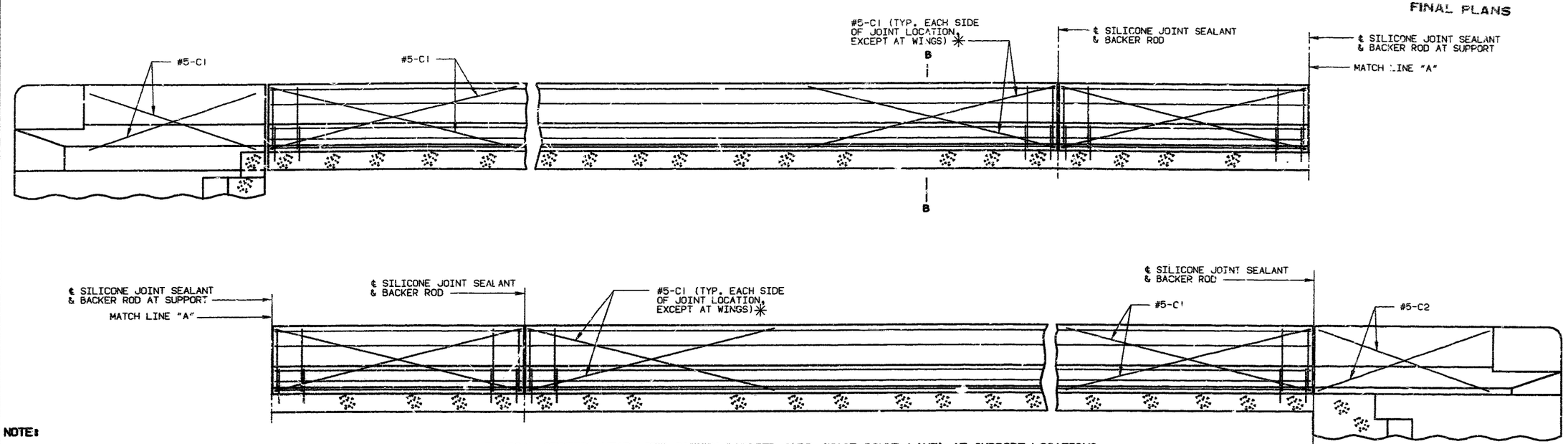

NOTE:

TOP OF SAFETY BARRIER CURB SHALL BE BUILT PARALLEL TO GRADE WITH SAFETY BARRIER CURB JOINTS (EXCEPT AT END BENTS) NORMAL TO GRADE.

WHEN THE SAFETY BARRIER CURB IS BID BY LINEAR FEET, THE CONTRACT UNIT PRICE SHALL INCLUDE THE COST OF ALL CONCRETE AND REINFORCEMENT, COMPLETE-IN-PLACE.

CONCRETE IN THE SAFETY BARRIER CURB SHALL BE CLASS B1.

MEASUREMENT OF SAFETY BARRIER CURB IS TO THE NEAREST LINEAR FOOT FOR EACH STRUCTURE, MEASURED ALONG OUTSIDE TOP OF SLAB FROM END OF WING TO END OF WING.

TYPICAL SECTION NEAR LEFT SAFETY BARRIER CURB (EAST BOUND LANE) AT SUPPORT LOCATIONS (OPTIONAL SLIP-FORM BRIDGE SAFETY BARRIER CURB) RIGHT SIDE (WEST BOUND LANE) SIMILAR

NOTE:

JOINT SEALANT AND BACKER RODS SHALL BE USED ON ALL SLIP-FORM BRIDGE SAFETY BARRIER CURBS INSTEAD OF JOINT FILLER.

PLASTIC WATERSTOP SHALL NOT BE USED WITH SLIP-FORM OPTION.

C-BARS (SLIP-FORM OPTION ONLY) SHALL BE USED IN ADDITION TO CAST-IN-PLACE CONVENTIONAL FORMING REINFORCEMENT FOR BRIDGE SAFETY BARRIER CURB.

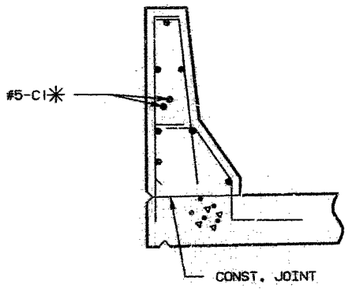

PART SECTION B-B

NOTE: ✳ EACH SIDE OF JOINT LOCATION, EXCEPT SPAN SIDE ONLY AT END BENTS.

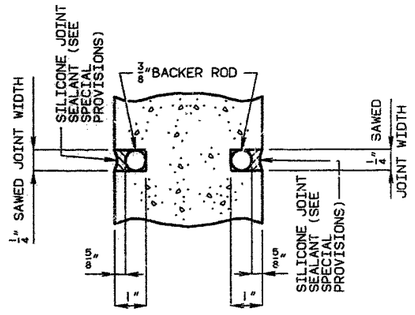

SECTION A-A

NOTE: COST OF SILICONE JOINT SEALANT AND BACKER ROD COMPLETE IN PLACE TO BE INCLUDED IN THE CONTRACT UNIT PRICE FOR SAFETY BARRIER CURB.

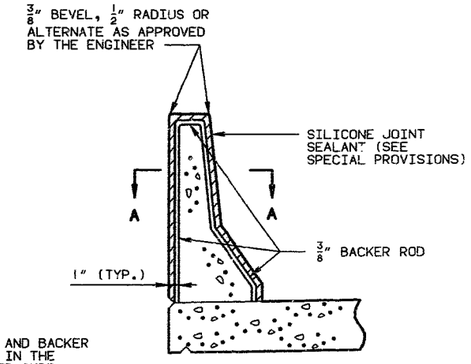

SECTION THRU JOINT

OPTIONAL SLIP-FORM BRIDGE SAFETY BARRIER CURB

B/C SF16,GS 3.30, , A
BARRIER CURB ELEVATION REVISED:
FEB. 1991

DETAILED SEPT. 1992
CHECKED MAY 1993

NOTE: THIS DRAWING IS NOT TO SCALE. FOLLOW DIMENSIONS.

SHEET NO. 44 OF 51.

JACKSON COUNTY

A-610R1

STATE	PROJ. NO.	SHEET NO.
MO.	J4I0807	342

FINAL PLANS

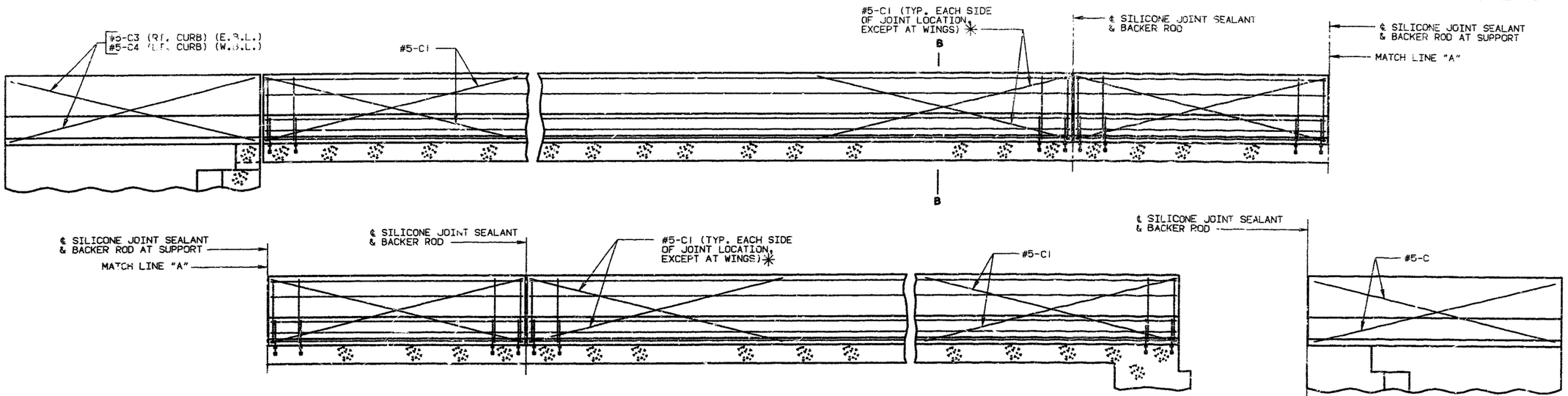

TYPICAL SECTION NEAR LEFT SAFETY BARRIER CURB (WEST BOUND LANE) AT SUPPORT LOCATIONS
(OPTIONAL SLIP-FORM BRIDGE SAFETY BARRIER CURB)
RIGHT SIDE (EAST BOUND LANE) SIMILAR

ELEVATION OF WING AT BENT NO. 5
(EAST BOUND LANE)

NOTE:

TOP OF SAFETY BARRIER CURB SHALL BE BUILT PARALLEL TO GRADE WITH SAFETY BARRIER CURB JOINTS (EXCEPT AT END BENTS) NORMAL TO GRADE.

WHEN THE SAFETY BARRIER CURB IS BID BY LINEAR FEET, THE CONTRACT UNIT PRICE SHALL INCLUDE THE COST OF ALL CONCRETE AND REINFORCEMENT, COMPLETE-IN-PLACE.

CONCRETE IN [illegible] SAFETY BARRIER CURB SHALL BE CLASS B1.

MEASUREMENT OF SAFETY BARRIER CURB IS TO THE NEAREST LINEAR FOOT FOR EACH STRUCTURE, MEASURED ALONG THE OUTSIDE TOP OF SLAB FROM END OF WING TO END OF WING.

NOTE:

JOINT SEALANT AND BACKER RODS SHALL BE USED ON ALL SLIP-FORM BRIDGE SAFETY BARRIER CURBS INSTEAD OF JOINT FILLER.

PLASTIC WATERSTOP SHALL NOT BE USED WITH SLIP-FORM OPTION.

C-BARS (SLIP-FORM OPTION ONLY) SHALL BE USED IN ADDITION TO CAST-IN-PLACE CONVENTIONAL FORMING REINFORCEMENT FOR BRIDGE SAFETY BARRIER CURB.

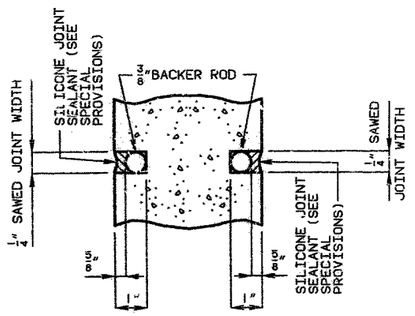

SECTION A-A

NOTE: COST OF SILICONE JOINT SEALANT AND BACKER ROD COMPLETE IN PLACE TO BE INCLUDED IN THE CONTRACT UNIT PRICE FOR SAFETY BARRIER CURB.

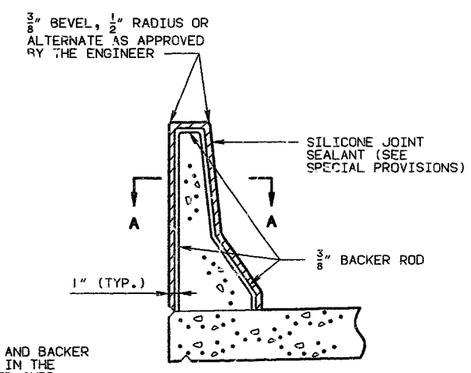

SECTION THRU JOINT

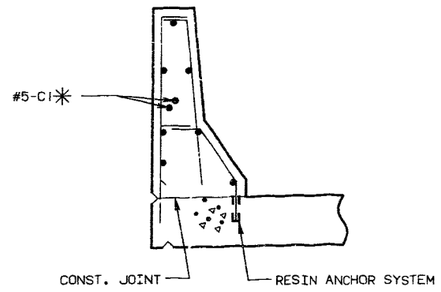

PART SECTION B-B

NOTE: ✳ EACH SIDE OF JOINT LOCATION, EXCEPT SPAN SIDE ONLY AT END BENTS.

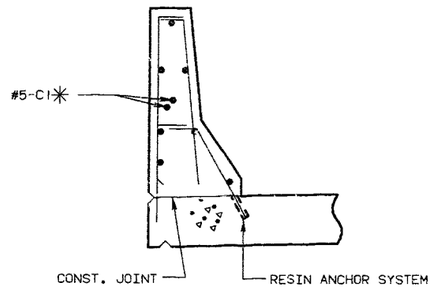

PART SECTION B-B
(OPTIONAL ANCHORING SYSTEM)

OPTIONAL SLIP-FORM BRIDGE SAFETY BARRIER CURB

B/C SF16,GS 3.30, , ,A
BARRIER CURB ELEVATION
REVISED:
FEB. 1991

DETAILED MAY 1993
CHECKED MAY 1993

NOTE: THIS DRAWING IS NOT TO SCALE. FOLLOW DIMENSIONS.

JACKSON COUNTY

A-610R1

FINAL PLANS

BILL OF REINFORCING STEEL

NO. REQ'D.	MARK NO. SIZE MARK	LOCATION	EPOXY (E)	SHAPE NO.	STIRRUP (S)	SUBSTR. (X)	VARIES (V)	NO. EACH	DIMENSIONS B FT. IN.	C FT. IN.	D FT. IN.	E FT. IN.	F FT. IN.	H FT. IN.	K FT. IN.	NOMINAL LENGTH FT. IN.	ACTUAL LENGTH FT. IN.	WEIGHT LBS.
		SUBSTRUCTURE																
		END BT NO 1																
		(E.B.L.)																
30	6D1	FOOTING		20		X			3 5.000							3 5	3 5	154
8	6F1	WING BRACE		15		X			14.000	4 7.875	14.000	9.875	9.875	9.875	9.875	7 0	6 11	83
2	6H1	BACKWALL	E	20		X			21 8.000							21 8	21 8	65
2	6H2	BACKWALL	E	20		X			45 2.000							45 2	45 2	136
2	4H3	BACKWALL		20		X			21 10.000							21 10	21 10	29
4	4H4	BACKWALL		20		X			24 2.000							24 2	24 2	65
6	4H5	BACKWALL		20		X			14 5.000							14 5	14 5	58
6	4H6	BACKWALL		20		X			5 3.000							5 3	5 3	21
8	6H7	BEAM		18		X			14 5.000							15 9	15 9	189
2	6H8	BEAM		20		X			14 5.000							14 5	14 5	43
8	6H9	BEAM		18		X			5 3.000							6 7	6 7	79
2	6H10	BEAM		20		X			5 3.000							5 3	5 3	16
1	4H11	APP. HCH.		20		X			18 10.000							18 10	18 10	13
2	4H12	APP. HCH.		20		X			22 10.000							22 10	22 10	31
2	6H13	WING	E	20		X			5 9.000							5 9	5 9	17
4	6H14	WING		20		X			5 9.000							5 9	5 9	35
18	3H15	WING		20		X	V	2	2 7.000							2 7	2 7	
		INCREMENT =							5 8.000							5 8	5 8	112
		4.625 INCH																
4	6H16	WING		20		X			11 3.000							11 3	11 3	68
18	6H17	WING		20		X	V	2	3 4.000							3 4	3 4	
		INCREMENT =							11 1.000							11 1	11 1	195
		11.625 INCH																
10	4H18	CURTAIN WALL		20		X			2 6.000							2 6	2 6	17
2	6T1	WING		25		X			2 2.000	7 2.875	19.000			6 5.125	3 3.875	11 0	10 11	33
2	6T2	WING		25		X			16.000	10 11.625	20.000			6 8.750	8 8.000	14 0	13 11	42
2	4T3	WING		19		X			6 8.000	3 2.000						9 10	9 9	13
17	6U1	BEAM		13	S	X			2 9.000	23.000	2 6.000	23.000				10 2	9 8	247
6	6U2	BEAM		13	S	X			2 6.000	2 2.875	2 6.000	2 2.875				10 10	10 4	93
6	4U3	BEAM		10	S	X				6.000	2 6.000					3 6	3 4	13
64	4U4	APP. HCH.		10	S	X				6.000	15.000					2 3	2 1	89
38	5V1	BACKWALL	E	20		X			7 3.000							7 3	7 3	287
94	5V2	BACKWALL	E	20		X			2 2.000							2 2	2 2	212
2	6V3	WING		20		X			3 9.000							3 9	3 9	11
6	6V4	WING		20		X	V	2	5 8.000							5 8	5 8	
		INCREMEN =							7 7.000							7 7	7 7	60
		11.500 INCH																
6	6V5	WING		20		X			8 6.000							8 6	8 6	77
2	6V6	WING		20		X			2 0.000							2 0	2 0	6
4	6V7	WING	E	17		X	V	1	3 7.000							4 3	4 3	
		INCREMENT =							5 8.000							6 2	6 2	31
		7.625 INCH																
7	6V8	WING	E	17		X	V	1	6 2.000							6 10	6 10	
		INCREMENT =							8 5.000							9 1	9 1	84
		4.500 INCH																
4	6V9	WING	E	20		X	V	1	3 9.000							3 9	3 9	
		INCREMENT =							5 8.000							5 8	5 8	28
		7.625 INCH																

BILL OF REINFORCING STEEL

NO. REQ'D.	MARK NO. SIZE MARK	LOCATION	EPOXY (E)	SHAPE NO.	STIRRUP (S)	SUBSTR. (X)	VARIES (V)	NO. EACH	DIMENSIONS B FT. IN.	C FT. IN.	D FT. IN.	E FT. IN.	F FT. IN.	H FT. IN.	K FT. IN.	NOMINAL LENGTH FT. IN.	ACTUAL LENGTH FT. IN.	WEIGHT LBS.
7	6V10	WING	E	20		X	V	1	6 4.000							8 4	8 4	
		INCREMENT =							8 7.000							8 7	8 7	78
		4.500 INCH																
3	6V11	WING	E	17		X			8 9.000							9 5	9 5	42
3	6V12	WING	E	20		X			8 11.000							8 11	8 11	40
2	4V13	CURTAIN WALL		20		X			6 3.000							6 3	6 3	8
6	W5W10	A.B. WELLS		22		X			12.000	9.125						19 9	19 9	20
		END BT NO 1																
		(W.B.L.)																
40	6D1	FOOTING		20		X			3 5.000							3 5	3 5	205
22	6D2	FOOTING		20		X			5 8.000							5 8	5 8	187
10	6F1	WING BRACE		15		X			14.000	4 7.875	14.000	9.875	9.875	9.875	9.875	7 0	6 11	104
2	6H19	BACKWALL	E	20		X			57 2.000							57 2	57 2	172
2	6H20	BACKWALL	E	20		X			21 8.000							21 8	21 8	65
4	4H21	BACKWALL		20		X			30 6.000							30 6	30 6	81
2	4H22	BACKWALL		20		X			21 10.000							21 10	21 0	29
6	4H23	BACKWALL		20		X			17 3.000							17 3	17 3	69
6	4H24	BACKWALL		20		X			14 5.000							14 5	14 5	58
8	6H25	BEAM		18		X			17 3.000							18 7	18 7	223
2	6H26	BEAM		20		X			17 3.000							17 3	17 3	52
8	6H27	BEAM		18		X			14 5.000							15 9	15 9	189
2	6H28	BEAM		20		X			14 5.000							14 5	14 5	43
2	4H29	APP. HCH.		20		X			28 9.000							28 9	28 9	38
1	4H30	APP. HCH.		20		X			18 10.000							18 10	18 10	13
4	6H31	WING		20		X			11 3.000							11 3	11 3	68
18	6H32	WING		20		X	V	2	3 1.000							3 1	3 1	
		INCREMENT =							11 1.000							11 1	11 1	192
		12.000 INCH																
10	4H33	CURTAIN WALL		20		X			2 6.000							2 6	2 6	17
18	4H34	WING		20		X			10 5.000							10 5	10 5	125
10	4H35	CURTAIN WALL		20		X			2 6.000							2 6	2 6	17
2	6T4	WING		25		X			16.000	10 10.250	21.000			6 6.500	8 7.875	13 11	13 10	42
2	4T5	CURTAIN WALL		19		X			6 8.000	3 2.000						9 10	9 9	13
2	4T6	CURTAIN WALL		19		X			6 10.000	3 2.000						10 0	9 11	13
6	6U3	BEAM		10	S	X				6.000	2 6.000					3 6	3 2	29
73	4U4	APP. HCH.		10	S	X				6.000	15.000					2 3	2 1	102
21	6U5	BEAM		13	S	X			2 6.000	2 0.875	2 6.000	2 0.875				10 6	10 0	315
17	6U6	BEAM		13	S	X			2 6.000	23.000	2 6.000	23.000				10 2	9 8	247
62	5V1	BACKWALL	E	20		X			7 3.000							7 3	7 3	469
94	5V2	BACKWALL	E	20		X			2 2.000							2 2	2 2	212
2	6V14	WING		20		X			2 0.000							2 0	2 0	6
4	6V15		E	17		X	V	1	3 7.000							4 3	4 3	
		INCREMENT =							5 8.000							6 1	6 1	31
		7.375 INCH																
7	6V16	WING	E	17		X	V	1	6 2.000							6 10	6 10	
		INCREMENT =							8 3.000							8 11	8 11	83
		4.125 INCH																

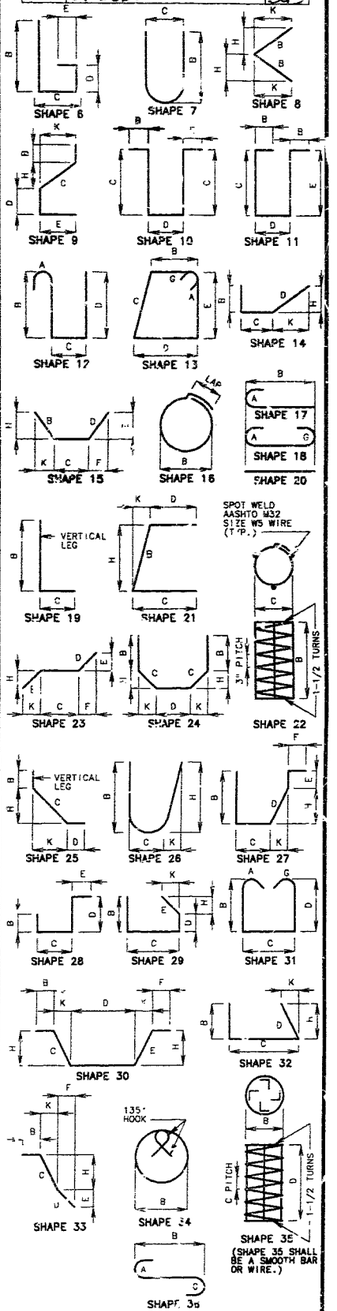

BENDING DIAGRAMS

STATE	PROJ. NO.	SHEET NO.
MO.	J4I0807	343

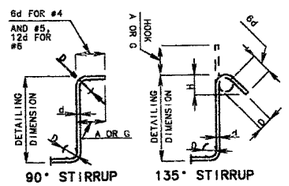

STIRRUP HOOK DIMENSIONS GRADES 40 - 50 - 60 KSI				
BAR SIZE	D (IN.)	90° HOOK	135° HOOK	
		HOOK A OR G	HOOK A OR G	APPROX. H
#4	2"	4-1/2"	4-1/2"	3"
#5	2-1/2"	6"	5-1/2"	3-3/4"
#6	4-1/2"	12"	8"	4-1/2"

NOTE: UNLESS OTHERWISE NOTED DIAMETER "D" IS THE SAME FOR ALL BENDS AND HOOKS ON A BAR.

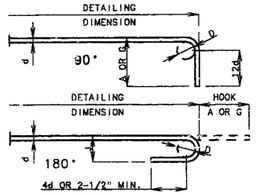

NOTE: THIS DRAWING IS NOT TO SCALE. FOLLOW DIMENSIONS.

TWO ADDITIONAL ARE INCLUDED IN THE BAR BILL FOR TESTING.

END HOOK DIMENSIONS				
BAR SIZE	D (IN.)	ALL GRADES 180° HOOKS		90° HOOKS
		A OR G	J	A OR G
#3	2-1/4"	5"	3"	6"
#4	3"	6"	4"	8"
#5	3-3/4"	7"	5"	10"
#6	4-1/2"	8"	6"	12"
#7	5-1/4"	10"	7"	14"
#8	6"	11"	8"	16"
#9	6-1/2"	15"	11-3/4"	19"
#10	10 3/4"	17"	13-1/4"	22"
#11	12"	19"	14-3/4"	2'-0"
#14	18-1/4"	2'-3"	21-3/4"	2'-7"

NOTE:
ALL STANDARD HOOKS AND BENDS OTHER THAN 180 DEG. TO BE BENT WITH THE SAME PROCEDURE AS FOR 90 DEG. STD. HOOKS.
HOOKS AND BENDS SHALL BE IN ACCORDANCE WITH THE PROCEDURES AS SHOWN ON THIS SHEET.
E = EPOXY COATED REINFORCEMENT.
S = STIRRUP.
X = BAR IS INCLUDED IN SUBSTRUCTURE QUANTITIES.
V = BAR DIMENSIONS VARY IN EQUAL INCREMENTS BETWEEN DIMENSIONS SHOWN ON THIS LINE AND THE FOLLOWING LINE.
NO. EA. = NUMBER OF BARS OF EACH LENGTH.
NOMINAL LENGTHS ARE BASED ON OUT TO OUT DIMENSIONS SHOWN IN BENDING DIAGRAMS AND ARE LISTED FOR FABRICATORS USE. (NEAREST INCH)
ACTUAL LENGTHS ARE MEASURED ALONG CENTERLINE BAR TO THE NEAREST INCH.
PAYWEIGHTS ARE BASED ON ACTUAL LENGTHS.
FOUR ANGLE OR CHANNEL SPACERS ARE REQUIRED FOR EACH COLUMN SPIRAL. SPACERS ARE TO BE PLACED ON INSIDE OF SPIRALS. LENGTH AND WEIGHT OF COLUMN SPIRALS DO NOT INCLUDE SPLICES OR SPACERS.
REINFORCING STEEL (GRADE 60) = FY 60,000 PSI.

STD 90.8 REVISED MAY 1974 OCT. 1991

DETAILED AUG. 1993
CHECKED AUG. 1993

SHEET NO. 46 OF 51.

JACKSON COUNTY

A-610R1

FINAL PLANS

BILL OF REINFORCING STEEL

NO. REQ'D.	MARK NO. SIZE MARK	LOCATION	EPOXY (E)	SHAPE NO.	STIRRUP (S)	SUBSTR. (X)	VARIES (V)	NO. EACH	DIMENSIONS B FT. IN.	C FT. IN.	D FT. IN.	E FT. IN.	F FT. IN.	H FT. IN.	K FT. IN.	NOMINAL LENGTH FT. IN.	ACTUAL LENGTH FT. IN.	WEIGHT LBS.
4	6V17	WING	E	20		X	V	1	3 9.000							3 9	3 9	
		INCREMENT =							5 7.000							5 7	5 7	28
		7.375 INCH																
7	6V18	WING	E	20		X	V	1	6 4.000							6 4	6 4	
		INCREMENT =							8 5.000							8 5	8 5	78
		4.125 INCH																
3	6V19	WING	E	17		X			8 7.000							9 3	9 3	42
3	6V20	WING	E	20		X			8 9.000							8 9	8 9	39
2	4V21	CURTAIN WALL		20		X			6 3.000							6 3	6 3	8
22	6V22	WING		20		X	V	2	6 1.000							6 1	6 1	
		INCREMENT =							6 5.000							6 5	6 5	207
		0.375 INCH																
2	4V23	CURTAIN WALL		20		X			6 5.000							6 5	6 5	9
8	W5W10	A.B. WELLS		22		X			12.000	9.125						19 9	19 9	26
		INT. BT NO 2																
		(E.B.L.)																
46	8D3	FOOTING		20		X			7 8.000							7 8	7 8	942
28	8D4	FOOTING		20		X			14 8.000							14 8	14 8	1096
20	7D5	FOOTING		20		X			8 8.000							8 8	8 8	354
4	6D6	FOOTING		10		X				5 0.000	14 0.000					24 0	23 8	142
5	9H36	BEAM		18		X			6 3.000							8 9	8 9	149
4	6H37	BEAM		20		X			5 11.000							5 11	5 11	36
4	9H38	BEAM		18		X			5 11.000							8 5	8 5	114
5	9H39	BEAM		20		X			6 3.000							6 3	6 3	106
4	9H40	BEAM		20		X			5 11.000							5 11	5 11	80
8	7H41	BEAM		7		X			4 9.000	4 1.750						11 9	11 9	192
4	9H42	BEAM		18		X			14 10.000							17 4	17 4	236
5	9H43	BEAM		18		X			15 2.000							17 8	17 8	300
5	9H44	BEAM		20		X			15 2.000							15 2	15 2	258
4	9H45	BEAM		20		X			14 10.000							14 10	14 10	202
4	6H46	BEAM		20		X			14 10.000							14 10	14 10	89
8	9H47	WEB		20		X			19 9.000							19 9	19 9	537
4	9H48	WEB		20		X			20 5.000							20 5	20 5	278
4	9H49	WEB		20		X			21 6.000							21 6	21 6	292
2	6H50	WEB		20		X			21 6.000							21 6	21 6	65
6	8H51	TIE BEAM		20		X			13 5.000							13 5	13 5	215
10	4H52	TIE BEAM		20		X			11 4.000							11 4	11 4	76
6	8H53	TIE BEAM		20		X			18 1.000							18 1	18 1	290
10	4H54	TIE BEAM		20		X			16 0.000							16 0	16 0	107
86	4P1	COLUMN		16		X			3 9.000							12 8	12 8	728
	5U7	BEAM		13	S	X			2 4.875	3 9.875	2 4.875	3 9.875				13 5	13 1	14
1	5U8	BEAM		13	S	X			3 11.750	3 9.875	3 11.750	3 9.875				16 6	16 3	17
4	5U9	BEAM		13	S	X			4 3.000	3 9.875	4 3.000	3 9.875				17 1	16 9	70
5	5U10	BEAM		13	S	X			4 3.000	3 6.000	4 3.000	3 6.000				16 5	16 1	84
24	5U11	BEAM		13	S	X			2 10.000	3 6.000	2 10.000	3 6.000				13 7	13 3	332
2	5U12	BEAM		13	S	X			2 7.875	3 6.000	2 7.875	3 6.000				13 3	12 11	27
1	5U13	BEAM		13	S	X			2 4.875	3 6.000	2 4.875	3 6.000				12 9	12 5	13
4	4U14	BEAM		10	S	X				6.000	4 3.000					5 3	5 1	14
20	5U15	WEB		13	S	X			3 9.000	2 9.000	3 9.000	2 9.000				13 11	13 7	283
25	4U16	TIE BEAM		13	S	X			21.000	5 9.000	21.000	5 9.000				15 9	15 6	259
2	4U60	BEAM		10	S	X				6.000	3 5.250					4 5	4 3	6

BILL OF REINFORCING STEEL

NO. REQ'D.	MARK NO. SIZE MARK	LOCATION	EPOXY (E)	SHAPE NO.	STIRRUP (S)	SUBSTR. (X)	VARIES (V)	NO. EACH	DIMENSIONS B FT. IN.	C FT. IN.	D FT. IN.	E FT. IN.	F FT. IN.	H FT. IN.	K FT. IN.	NOMINAL LENGTH FT. IN.	ACTUAL LENGTH FT. IN.	WEIGHT LBS.
46	8V24	COLUMN		20		X			29 2.000							29 2	29 2	3532
46	8V25	COLUMN		20		X			20 10.000							20 10	20 10	2559
6	W5W20	A.B. WELLS		22		X			12.000	9.125						19 9	19 9	20
		INT. BT NO 2																
		(W.B.L.)																
46	8D3	FOOTING		20		X			7 8.000							7 8	7 8	942
20	7D7	FOOTING		20		X			10 2.000							10 2	10 2	416
12	7D8	FOOTING		20		X			7 8.000							7 8	7 8	188
4	6D9	FOOTING		10		X				4 6.000	9 6.000					18 6	18 2	109
8	7H41	BEAM		7		X			4 9.000	4 1.750						11 9	11 9	192
4	9H42	BEAM		18		X			14 10.000							17 4	17 4	236
5	9H43	BEAM		18		X			15 2.000							17 8	17 8	300
5	9H44	BEAM		20		X			15 2.000							15 2	15 2	258
4	9H45	BEAM		20		X			14 10.000							14 10	14 10	202
4	6H46	BEAM		20		X			14 10.000							14 10	14 10	89
8	9H47	WEB		20		X			19 9.000							19 9	19 9	537
4	9H48	WEB		20		X			20 5.000							20 5	20 5	278
4	9H49	WEB		20		X			21 6.000							21 6	21 6	292
2	6H50	WEB		20		X			21 6.000							21 6	21 6	65
6	8H53	TIE BEAM		20		X			18 1.000							18 1	18 1	290
10	4H54	TIE BEAM		20		X			16 0.000							16 0	16 0	107
4	9H55	BEAM		18		X			16 8.000							19 2	19 2	261
5	9H56	BEAM		18		X			17 0.000							19 6	19 6	332
4	6H57	BEAM		20		X			16 8.000							16 8	16 8	100
5	9H58	BEAM		20		X			17 0.000							17 0	17 0	289
4	9H59	BEAM		20		X			16 6.000							16 8	16 8	227
6	8H60	TIE BEAM		20		X			18 8.000							18 8	18 8	299
10	4H61	TIE BEAM		20		X			16 7.000							16 7	16 7	111
89	4P1	COLUMN		16		X			3 9.000							12 8	12 8	753
4	5U10	BEAM		13	S	X			4 3.000	3 6.000	4 3.000	3 6.000				16 5	16 1	67
24	5U11	BEAM		13	S	X			2 10.000	3 6.000	2 10.000	3 6.000				13 7	13 3	332
2	5U12	BEAM		13	S	X			2 7.875	3 6.000	2 7.875	3 6.000				13 3	12 11	27
1	5U13	BEAM		13	S	X			2 4.875	3 6.000	2 4.875	3 6.000				12 9	12 5	13
4	4U14	BEAM		10	S	X				6.000	4 3.000					5 3	5 1	14
20	5U15	WEB		13	S	X			3 9.000	2 9.000	3 9.000	2 9.000				13 11	13 7	283
30	4U16	TIE BEAM		13	S	X			21.000	5 9.000	21.000	5 9.000				15 9	15 6	311
8	5U17	BEAM		13	S	X			4 3.000	3 8.000	4 3.000	3 8.000				16 9	16 5	137
22	5U18	BEAM		13	S	X			2 10.000	3 8.000	2 10.000	3 8.000				13 11	13 7	312
2	5U19	BEAM		13	S	X			2 6.000	3 8.000	2 6.000	3 8.000				13 3	12 11	27
1	5U20	BEAM		13	S	X			17.500	3 8.000	17.500	3 8.000				11 2	10 10	11
1	4U60	BEAM		10	S	X				6.000	3 5.250					4 5	4 3	3
1	4U61	BEAM		10	S	X				6.000	3 0.125					4 0	3 10	3
23	8V25	COLUMN		20		X			20 10.000							20 10	20 10	1279
46	8V26	COLUMN		20		X			28 10.000							28 10	28 10	3541
23	8V27	COLUMN		20		X			23 10.000							23 10	23 10	1464
8	W5W20	A.B. WELLS		22		X			12.000	9.125						19 9	19 9	26

TWO ADDITIONAL ARE INCLUDED IN THE BAR BILL FOR TESTING.

STATE	PROJ. NO.	SHEET NO.
MO.	J4I0807	344

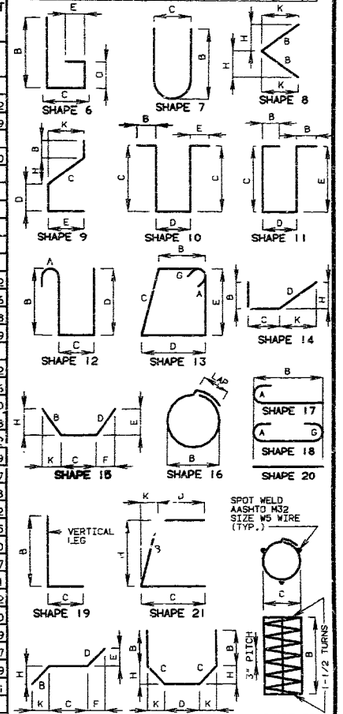

BENDING DIAGRAMS

STD 90.8	REVISED
MAY 1972	OCT. 1991

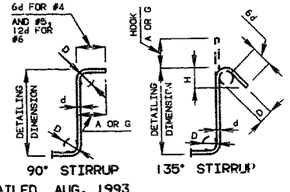

STIRRUP HOOK DIMENSIONS GRADES 40 - 50 - 60 KSI					
BAR SIZE	D (IN.)	90° HOOK		135° HOOK	
		HOOK A OR G		HOOK A OR G	APPROX. H
#4	2"	4-1/2"		4-1/2"	3"
#5	2-1/2"	6"		5-1/2"	3-3/4"
#6	4-1/2"	12"		8"	4-1/2"

NOTE: UNLESS OTHERWISE NOTED DIAMETER "D" IS THE SAME FOR ALL BENDS AND HOOKS ON A BAR.

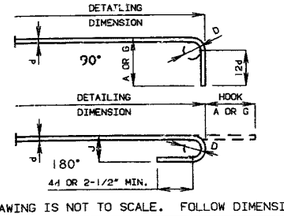

END HOOK DIMENSIONS					
BAR SIZE	D (IN.)	ALL GRADES			
		180° HOOKS		90° HOOKS	
		A OR G	J	A OR G	
#3	2-1/4"	5"	3"	6"	
#4	3"	6"	4"	8"	
#5	3-3/4"	7"	5"	10"	
#6	4-1/2"	8"	6"	12"	
#7	5-1/4"	10"	7"	14"	
#8	6"	11"	8"	16"	
#9	9-1/2"	15"	11-3/4"	19"	
#10	10-3/4"	17"	13-1/4"	22"	
#11	12"	19"	14-3/4"	2'-0"	
#14	18-1/4"	2'-3"	21-3/4"	2'-7"	

NOTE: THIS DRAWING IS NOT TO SCALE. FOLLOW DIMENSIONS.

NOTE:
ALL STANDARD HOOKS AND BENDS OTHER THAN 180 DEG. TO BE BENT WITH THE SAME PROCEDURE AS FOR 90 DEG. STD. HOOKS.
HOOKS AND BENDS SHALL BE IN ACCORDANCE WITH THE PROCEDURES AS SHOWN ON THIS SHEET.
E = EPOXY COATED REINFORCEMENT.
S = STIRRUP.
X = BAR IS INCLUDED IN SUBSTRUCTURE QUANTITIES.
V = BAR DIMENSIONS VARY IN EQUAL INCREMENTS BETWEEN DIMENSIONS SHOWN ON THIS LINE AND THE FOLLOWING LINE.
NO. EA. = NUMBER OF BARS OF EACH LENGTH.
NOMINAL LENGTHS ARE BASED ON OUT TO OUT DIMENSIONS SHOWN IN BENDING DIAGRAMS AND ARE LISTED FOR FABRICATORS USE. (NEAREST INCH)
ACTUAL LENGTHS ARE MEASURED ALONG CENTERLINE BAR TO THE NEAREST INCH.
PAYWEIGHTS ARE BASED ON ACTUAL LENGTHS.
FOUR ANGLE OR CHANNEL SPACERS ARE REQUIRED FOR EACH COLUMN SPIRAL. SPACERS ARE TO BE PLACED ON INSIDE OF SPIRALS. LENGTH AND WEIGHT OF COLUMN SPIRALS DO NOT INCLUDE SPLICES OR SPACERS.
REINFORCING STEEL (GRADE 60) = FY 60,000 PSI.

DETAILED AUG. 1993
CHECKED AUG. 1993

SHEET NO. 47 OF 51.

JACKSON COUNTY

A-6101

BILL OF REINFORCING STEEL

NO. REQ'D.	MARK NO. SIZE	MARK NO. MARK	LOCATION	EPOXY (E)	SHAPE NO.	STIRRUP (S)	SUBSTR. (X)	VARIES (V)	NO. EACH	DIMENSIONS B FT. IN.	C FT. IN.	D FT. IN.	E FT. IN.	F FT. IN.	H FT. IN.	K FT. IN.	NOMINAL LENGTH FT. IN.	ACTUAL LENGTH FT. IN.	WEIGHT LBS.
			INT. BT NO 3																
			(E.B.L.)																
46	8	D10	COLUMN		20		X			9 8.000							9 8	9 8	1187
58	8	D11	FOOTING		20		X			9 11.000							9 11	9 11	1536
32	8	D12	FOOTING		18		X			15 2.000							17 0	17 0	1452
26	5	D13	FOOTING		18		X			8 2.000							9 4	9 4	253
5	9	H62	BEAM		18		X			6 3.000							8 9	8 9	149
4	6	H63	BEAM		20		X			5 11.000							5 11	5 11	36
4	9	H64	BEAM		18		X			5 11.000							8 5	8 5	114
5	9	H65	BEAM		20		X			6 3.000							6 3	6 3	106
4	9	H66	BEAM		20		X			5 11.000							5 11	5 11	80
8	7	H67	BEAM		7		X			4 9.000	4 1.750						11 9	11 9	192
4	9	H68	BEAM		18		X			14 10.000							17 4	17 4	236
5	9	H69	BEAM		18		X			15 2.000							17 8	17 8	300
5	9	H70	BEAM		20		X			15 2.000							15 2	15 2	258
4	9	H71	BEAM		20		X			14 10.000							14 10	14 10	202
4	6	H72	BEAM		20		X			14 10.000							14 10	14 10	89
8	9	H73	WEB		20		X			19 9.000							19 9	19 9	537
4	9	H74	WEB		20		X			20 5.000							20 5	20 5	278
4	9	H75	WEB		20		X			21 6.000							21 6	21 6	292
2	6	H76	WEB		20		X			21 6.000							21 6	21 6	65
6	8	H77	TIE BEAM		20		X			12 8.000							12 8	12 8	203
22	4	H78	TIE BEAM		20		X			11 4.000							11 4	11 4	167
6	8	H79	TIE BEAM		20		X			17 4.000							17 4	17 4	278
22	4	H80	TIE BEAM		20		X			16 0.000							16 0	16 0	235
88	4	P2	COLUMN		16		X			3 9.000							12 8	12 8	745
56	4	P3	COLUMN		16		X			4 9.000							15 10	15 10	592
1	5	U21	BEAM		13	S	X			2 4.875	3 9.875	2 4.875	3 9.875				13 5	13 1	14
1	5	U22	BEAM		13	S	X			3 11.750	3 9.875	3 11.750	3 9.875				16 6	16 3	17
4	5	U23	BEAM		13	S	X			4 3.000	3 9.875	4 3.000	3 9.875				17 1	16 9	70
5	5	U24	BEAM		13	S	X			4 3.000	3 6.000	4 3.000	3 6.000				16 5	16 1	84
24	5	U25	BEAM		13	S	X			2 10.000	3 6.000	2 10.000	3 6.000				13 7	13 3	332
2	5	U26	BEAM		13	S	X			2 7.875	3 6.000	2 7.875	3 6.000				13 3	12 11	27
1	5	U27	BEAM		13	S	X			2 4.875	3 6.000	2 4.875	3 6.000				12 9	12 5	13
4	4	U28	BEAM		10	S	X				6.000	4 3.000					5 3	5 1	14
20	5	U29	WEB		13	S	X			3 9.000	2 9.000	3 9.000	2 9.000				13 11	13 7	283
46	4	U30	TIE BEAM		10	S	X				2 0.500	11 9.000					15 10	15 8	481
2	4	U60	BEAM		10	S	X				6.000	3 5.250					4 5	4 3	6
46	8	V27	COLUMN		20		X			46 0.000							46 0	46 0	5650
58	9	V28	COLUMN		20		X			27 9.000							27 9	27 9	5472
6	W5	W30	A.B. WELLS		22		X			12.000	9.125						19 9	19 9	20
			INT. BT NO 3																
			(W.B.L.)																
46	8	D10	COLUMN		20		X			9 8.000							9 8	9 8	1187
58	9	D11	FOOTING		20		X			9 11.000							9 11	9 11	1956
32	8	D12	FOOTING		18		X			15 2.000							17 0	17 0	1452
32	5	D13	FOOTING		18		X			8 2.000							9 4	9 4	312

BILL OF REINFORCING STEEL

NO. REQ'D.	MARK NO. SIZE	MARK NO. MARK	LOCATION	EPOXY (E)	SHAPE NO.	STIRRUP (S)	SUBSTR. (X)	VARIES (V)	NO. EACH	DIMENSIONS B FT. IN.	C FT. IN.	D FT. IN.	E FT. IN.	F FT. IN.	H FT. IN.	K FT. IN.	NOMINAL LENGTH FT. IN.	ACTUAL LENGTH FT. IN.	WEIGHT LBS.
8	7	H67	BEAM		7		X			4 9.000	4 1.750						11 9	11 9	192
4	9	H68	BEAM		18		X			14 10.000							17 4	17 4	236
5	9	H69	BEAM		18		X			15 2.000							17 8	17 8	300
5	9	H70	BEAM		20		X			15 2.000							15 2	15 2	258
4	9	H71	BEAM		20		X			14 10.000							14 10	14 10	202
4	6	H72	BEAM		20		X			14 10.000							14 10	14 10	89
8	9	H73	WEB		20		X			19 9.000							19 9	19 9	537
4	9	H74	WEB		20		X			20 5.000							20 5	20 5	278
4	9	H75	WEB		20		X			21 6.000							21 6	21 6	292
2	6	H76	WEB		20		X			21 6.000							21 6	21 6	65
6	8	H79	TIE BEAM		20		X			17 4.000							17 4	17 4	278
22	4	H80	TIE BEAM		20		X			16 0.000							16 0	16 0	235
4	9	H81	BEAM		18		X			16 8.000							19 2	19 2	261
5	9	H82	BEAM		18		X			17 0.000							19 6	19 6	332
4	6	H83	BEAM		20		X			16 8.000							16 8	16 8	100
4	9	H84	BEAM		20		X			16 8.000							16 8	16 8	227
5	9	H85	BEAM		20		X			17 0.000							17 0	17 0	289
6	8	H86	TIE BEAM		20		X			17 11.000							17 11	17 11	287
22	4	H87	TIE BEAM		20		X			16 7.000							16 7	16 7	244
86	4	P2	COLUMN		16		X			3 9.000							12 8	12 8	728
56	4	P3	COLUMN		16		X			4 9.000							15 10	15 10	592
5	5	U24	BEAM		13	S	X			4 3.000	3 6.000	4 3.000	3 6.000				16 5	16 1	84
24	5	U25	BEAM		13	S	X			2 10.000	3 6.000	2 10.000	3 6.000				13 7	13 3	332
2	5	U26	BEAM		13	S	X			2 7.875	3 6.000	2 7.875	3 6.000				13 3	12 11	27
1	5	U27	BEAM		13	S	X			2 4.875	3 6.000	2 4.875	3 6.000				12 9	12 5	13
4	4	U28	BEAM		10	S	X				6.000	4 3.000					5 3	5 1	14
20	5	U29	WEB		13	S	X			3 9.000	2 9.000	3 9.000	2 9.000				13 11	13 7	283
58	4	U30	TIE BEAM		10	S	X				2 0.500	11 9.000					15 10	15 8	607
8	5	U31	BEAM		13	S	X			4 3.000	3 8.000	4 3.000	3 8.000				16 9	16 5	137
22	5	U32	BEAM		13	S	X			2 10.000	3 8.000	2 10.000	3 8.000				13 11	13 7	312
2	5	U33	BEAM		13	S	X			2 6.000	3 8.000	2 6.000	3 8.000				13 3	12 11	27
1	5	U34	BEAM		13	S	X			17.500	3 8.000	17.500	3 8.000				11 2	10 10	11
1	4	U60	BEAM		10	S	X				6.000	3 5.250					4 5	4 3	3
1	4	U61	BEAM		10	S	X				6.000	3 0.125					4 0	3 [illegible]	3
58	9	V28	COLUMN		20		X			27 9.000							27 9	27 9	5472
46	8	V29	COLUMN		20		X			45 7.000							45 7	45 7	3559
8	W5	W30	A.B. WELLS		22		X			12.000	9.125						19 9	19 9	26
			INT. BT NO 4																
			(E.B.L.)																
46	8	D14	COLUMN		20		X			9 8.000							9 8	9 8	1187
58	9	D15	FOOTING		20		X			9 11.000							9 11	9 11	1956
24	5	D16	FOOTING		18		X			7 8.000							8 10	8 10	221
24	8	D17	FOOTING		18		X			17 8.000							15 6	15 6	993
5	9	H88	BEAM		18		X			6 3.000							8 9	8 9	149
4	6	H89	BEAM		20		X			5 11.000							5 11	5 11	36
4	9	H90	BEAM		18		X			5 11.000							8 5	8 5	114
5	9	H91	BEAM		20		X			6 3.000							6 3	6 3	106
4	9	H92	BEAM		20		X			5 11.000							5 11	5 11	80
8	7	H93	BEAM		7		X			4 9.000	4 1.750						11 9	11 9	192
4	9	H94	BEAM		18		X			14 10.000							17 4	17 4	236
5	9	H95	BEAM		18		X			15 2.000							17 8	17 8	300

STATE MO. | PROJ. NO. J4I0807 | SHEET NO. 345

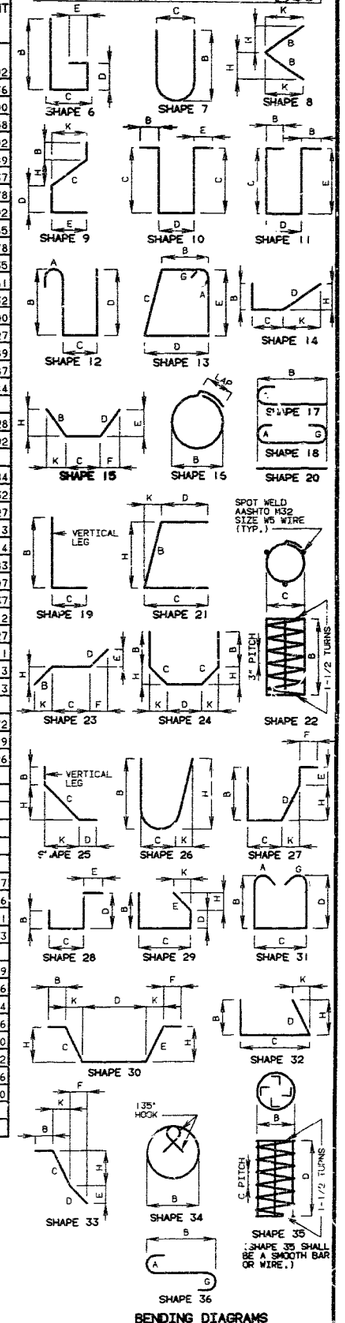

BENDING DIAGRAMS

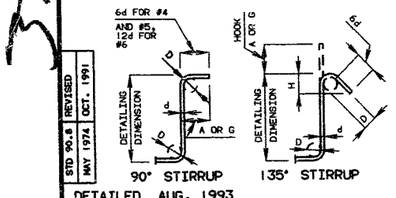

STIRRUP HOOK DIMENSIONS GRADES 40 - 50 - 60 KSI				
BAR SIZE	D (IN.)	90° HOOK HOOK A OR G	135° HOOK HOOK A OR G	135° HOOK APPROX. H
#4	2"	4-1/2"	4-1/2"	3"
#5	2-1/2"	6"	5-1/2"	3-3/4"
#6	4-1/2"	12"	8"	4-1/2"

NOTE: UNLESS OTHERWISE NOTED DIAMETER "D" IS THE SAME FOR ALL BENDS AND HOOKS ON A BAR.

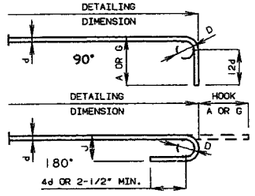

TWO ADDITIONAL ARE INCLUDED IN THE BAR BILL FOR TESTING.

END HOOK DIMENSIONS				
BAR SIZE	D (IN.)	ALL GRADES 180° HOOKS A OR G	180° HOOKS J	90° HOOKS A OR G
#3	2-1/4"	5"	3"	6"
#4	3"	6"	4"	8"
#5	3-3/4"	7"	5"	10"
#6	4-1/2"	8"	6"	12"
#7	5-1/4"	10"	7"	14"
#8	6"	11"	8"	16"
#9	9-1/2"	15"	11-3/4"	19"
#10	10-3/4"	17"	13-1/4"	22"
#11	12"	19"	14-3/4"	2'-0"
#14	18-1/4"	2'-3"	21-3/4"	2'-7"

NOTE:
ALL STANDARD HOOKS AND BENDS OTHER THAN 180 DEG. TO BE BENT WITH THE SAME PROCEDURE AS FOR 90 DEG. STD. HOOKS.
HOOKS AND BENDS SHALL BE IN ACCORDANCE WITH THE PROCEDURES AS SHOWN ON THIS SHEET.
E = EPOXY COATED REINFORCEMENT.
S = STIRRUP.
X = BAR IS INCLUDED IN SUBSTRUCTURE QUANTITIES.
V = BAR DIMENSIONS VARIES IN EQUAL INCREMENTS BETWEEN DIMENSIONS SHOWN ON THIS LINE AND THE FOLLOWING LINE.
NO. EA. = NUMBER OF BARS OF EACH LENGTH.
NOMINAL LENGTHS ARE BASED ON OUT TO OUT DIMENSIONS SHOWN IN BENDING DIAGRAMS AND ARE LISTED FOR FABRICATORS USE. (NEAREST INCH)
ACTUAL LENGTHS ARE MEASURED ALONG CENTERLINE BAR TO THE NEAREST INCH.
PAYWEIGHTS ARE BASED ON ACTUAL LENGTHS.
FOUR ANGLE OR CHANNEL SPACERS ARE REQUIRED FOR EACH COLUMN SPIRAL. SPACERS ARE TO BE PLACED ON INSIDE OF SPIRALS. LENGTH AND WEIGHT OF COLUMN SPIRALS DO NOT INCLUDE SPLICES OR SPACERS.
REINFORCING STEEL (GRADE 60) = FY 60,000 PSI.

NOTE: THIS DRAWING IS NOT TO SCALE. FOLLOW DIMENSIONS.

STD 90.8	REVISED
MAY 1974	OCT. 1991

DETAILED AUG. 1993
CHECKED AUG. 1993

JACKSON COUNTY

A-610R1

FINAL PLANS

BILL OF REINFORCING STEEL

NO. REQ'D.	MARK NO. SIZE	MARK NO. MARK	LOCATION	EPOXY (E)	SHAPE NO.	STIRRUP (S)	SUBSTR. (X)	VARIES (V)	NO. EACH	DIMENSIONS B FT. IN.	C FT. IN.	D FT. IN.	E FT. IN.	F FT. IN.	H FT. IN.	K FT. IN.	NOMINAL LENGTH FT. IN.	ACTUAL LENGTH FT. IN.	WEIGHT LBS.
5	9H96		BEAM		20		X			15 2.000							15 2	15 2	258
4	9H97		BEAM		20		X			14 10.000							14 10	14 10	202
4	6H98		BEAM		20		X			14 10.000							14 10	14 10	89
8	9H99		WEB		20		X			19 9.000							19 9	19 9	537
4	9H100		WEB		20		X			20 5.000							20 5	20 5	278
4	9H101		WEB		20		X			21 6.000							21 6	21 6	292
2	6H102		WEB		20		X			21 6.000							21 6	21 6	65
6	8H103		TIE BEAM		20		X			12 8.000							12 8	12 8	203
22	4H104		TIE BEAM		20		X			11 4.000							11 4	11 4	167
6	8H105		TIE BEAM		20		X			17 4.000							17 4	17 4	278
22	4H106		TIE BEAM		20		X			16 0.000							16 0	16 0	235
74	4P4		COLUMN		16		X			3 9.000							12 8	12 8	626
48	4P5		COLUMN		16		X			4 9.000							15 10	15 10	508
1	5U35		BEAM		13	S	X			2 4.875	3 9.875	2 4.875	3 9.875				13 5	13 1	14
1	5U36		BEAM		13	S	X			3 11.750	3 9.875	3 11.750	3 9.875				16 6	16 3	17
4	5U37		BEAM		13	S	X			4 3.000	3 9.875	4 3.000	3 9.875				17 1	16 9	70
5	5U38		BEAM		13	S	X			4 3.000	3 6.000	4 3.000	3 6.000				16 5	16 1	84
24	5U39		BEAM		13	S	X			2 10.000	3 6.000	2 10.000	3 6.000				13 7	13 3	332
2	5U40		BEAM		13	S	X			2 7.875	3 6.000	2 7.875	3 6.000				13 3	12 11	27
1	5U41		BEAM		13	S	X			2 4.875	3 6.000	2 4.875	3 6.000				12 9	12 5	13
4	4U42		BEAM		10	S	X				6.000	4 3.000					5 3	5 1	14
20	5U43		WEB		13	S	X			3 9.000	2 9.000	3 9.000	2 9.000				13 11	13 7	283
46	4U44		TIE BEAM		10	S	X				2 0.500	11 9.000					15 10	15 8	481
2	4U60		BEAM		10	S	X				6.000	3 5.250					4 5	4 3	6
46	8V30		COLUMN		20		X			39 9.000							39 9	39 9	4882
58	9V31		COLUMN		20		X			23 10.000							23 10	23 10	4700
6	W5W40		A.B. WELLS		22		X			12.000	9.125						19 9	19 9	20
			INT. BT NO 4 (W.B.L.)																
46	8D14		COLUMN		20		X			9 8.000							9 8	9 8	1187
58	9D15		FOOTING		20		X			9 11.000							9 11	9 11	1956
28	5D16		FOOTING		18		X			7 8.000							8 10	8 10	258
24	8D17		FOOTING		18		X			13 8.000							15 6	15 6	993
8	7H93		BEAM		7		X			4 9.000	4 1.750						11 9	11 9	192
4	5H94		BEAM		18		X			14 10.000							17 4	17 4	236
5	9H95		BEAM		18		X			15 2.000							17 8	17 8	300
5	9H96		BEAM		18		X			15 2.000							17 8	17 8	300
4	9H97		BEAM		20		X			14 10.000							14 10	14 10	202
4	6H98		BEAM		20		X			14 10.000							14 10	14 10	89
8	9H99		WEB		20		X			19 9.000							19 9	19 9	537
4	9H100		WEB		20		X			20 5.000							20 5	20 5	278
4	9H101		WEB		20		X			21 6.000							21 6	21 6	292
2	6H102		WEB		20		X			21 6.000							21 6	21 6	65
6	8H105		TIE BEAM		20		X			17 4.000							17 4	17 4	278
22	4H106		TIE BEAM		20		X			16 0.000							16 0	16 0	235
4	9H107		BEAM		18		X			16 8.000							19 2	19 2	261
5	9H108		BEAM		18		X			17 0.000							19 6	19 6	332
4	6H109		BEAM		20		X			16 8.000							16 8	16 8	100
4	9H110		BEAM		20		X			16 8.000							16 8	16 8	227
5	9H111		BEAM		20		X			17 0.000							17 0	17 0	289

BILL OF REINFORCING STEEL

NO. REQ'D.	MARK NO. SIZE	MARK NO. MARK	LOCATION	EPOXY (E)	SHAPE NO.	STIRRUP (S)	SUBSTR. (X)	VARIES (V)	NO. EACH	DIMENSIONS B FT. IN.	C FT. IN.	D FT. IN.	E FT. IN.	F FT. IN.	H FT. IN.	K FT. IN.	NOMINAL LENGTH FT. IN.	ACTUAL LENGTH FT. IN.	WEIGHT LBS.
6	8H112		TIE BEAM		20		X			17 11.000							17 11	17 11	287
22	4H113		TIE BEAM		20		X			16 7.000							16 7	16 7	244
74	4P4		COLUMN		16		X			3 9.000							12 8	12 8	626
48	4P5		COLUMN		16		X			4 9.000							15 10	15 10	508
5	5U38		BEAM		13	S	X			4 3.000	3 6.000	4 3.000	3 6.000				16 5	16 1	84
24	5U39		BEAM		13	S	X			2 10.000	3 6.000	2 10.000	3 6.000				13 7	13 3	332
2	5U40		BEAM		13	S	X			2 7.875	3 6.000	2 7.875	3 6.000				13 3	12 11	27
1	5U41		BEAM		13	S	X			2 4.875	3 6.000	2 4.875	3 6.000				12 9	12 5	13
4	4U42		BEAM		10	S	X				6.000	4 3.000					5 3	5 1	14
20	5U43		WEB		13	S	X			3 9.000	2 9.000	3 9.000	2 9.000				13 11	13 7	283
58	5U44		TIE BEAM		10	S	X				2 0.500	11 9.000					15 10	15 8	948
8	5U45		BEAM		13	S	X			4 3.000	3 8.000	4 3.000	3 8.000				16 9	15 5	137
22	5U46		BEAM		13	S	X			2 10.000	3 8.000	2 10.000	3 8.000				13 11	13 7	312
2	5U47		BEAM		13	S	X			2 6.000	3 8.000	2 6.000	3 8.000				13 3	12 11	27
1	5U48		BEAM		13	S	X			17.500	3 8.000	17.500	3 8.000				11 2	10 10	11
1	4U60		BEAM		10	S	X				6.000	3 5.250					4 5	4 3	3
1	4U61		BEAM		10	S	X				6.000	3 0.125					4 0	3 10	3
58	9V31		COLUMN		20		X			23 9.000							23 9	23 9	4684
46	8V32		COLUMN		20		X			39 4.000							39 4	39 4	4831
8	W5W40		A.B. WELLS		22		X			12.000	9.125						19 9	19 9	26
			SUPERSTR.																
			END BT NO 5 (E.B.L.)																
14	6F2		WING BRACE		15					14.000	4 6.000	14.000	9.875	9.875	9.875	9.875	6 10	6 9	142
12	6F3		DIAPH.		19					4 3.000	2 7.000						6 10	6 8	120
4	6H14		DIAPH.	E	20					46 6.000							46 6	46 6	279
4	6H15		DIAPH.	E	20					22 10.000							22 10	22 10	137
3	6H116		DIAPH.		20					46 6.000							46 6	46 6	210
3	6H117		DIAPH.		20					43 8.000							43 8	43 8	197
3	6H118		DIAPH.		20					11 0.000							11 0	11 0	50
3	6H119		DIAPH.		20					22 10.000							22 10	22 10	103
21	6H120		DIAPH & BEAM		20					14 5.000							14 5	14 5	455
21	6H121		DIAPH & BEAM		20					5 3.000							5 3	5 3	166
2	4H122		APP. HCH.		20					23 0.000							23 0	23 0	31
1	4H123		APP. HCH.		20					21 8.000							21 8	21 8	14
2	6H124		WING	E	20					10 5.000							10 5	10 5	31
4	6H125		WING		20					10 5.000							10 5	10 5	63
16	6H126		WING		20			V	2	4 0.000							4 0	4 0	
			INCREMENT = 10.375 INCH							10 1.000							10 1	10 1	169
2	6H127			E	20					11 2.000							11 2	11 2	34
20	6H128		WING		20					11 2.000							11 2	11 2	335
2	6T7		WING		25					2 1.000	9 6.375	3 1.750					6 3.125	7 2.250	14 9	14 8	44
4	5U49		BEAM		32	S				4 11.250	3 5.625	5 1.000					4 11.250	14.750	13 6	13 3	55
4	4U50		BEAM		13	S				2 8.875	3 0.125	3 5.625	2 11.000				12 11	12 7	34
1	4U51		BEAM		14	S				2 11.000	2 8.875	3 0.125					2 11.000	8.750	8 8	8 .	6
11	5U52		BEAM		32	S				4 9.000	3 5.625	4 10.750					4 9.000	14.250	13 1	12 10	147

STATE | PROJ. NO. | SHEET NO.
MO. J41B807 | 346

SHAPE 6 · SHAPE 7 · SHAPE 8 · SHAPE 9 · SHAPE 10 · SHAPE 11 · SHAPE 12 · SHAPE 13 · SHAPE 14 · SHAPE 15 · SHAPE 16 · SHAPE 17 · SHAPE 18 · SHAPE 20 · SHAPE 19 · SHAPE 21 · SHAPE 22 · SHAPE 23 · SHAPE 24 · SHAPE 25 · SHAPE 26 · SHAPE 27 · SHAPE 28 · SHAPE 29 · SHAPE 31 · SHAPE 30 · SHAPE 32 · SHAPE 33 · SHAPE 34 · SHAPE 35 · SHAPE 36

SPOT WELD AASHTO M32 SIZE W5 WIRE (TYP.)

BENDING DIAGRAMS

6d FOR #4 AND #5, 12d FOR #6

90° STIRRUP

135° STIRRUP

STIRRUP HOOK DIMENSIONS GRADES 40 - 50 - 60 KSI				
BAR SIZE	D (IN.)	90° HOOK HOOK A OR G	135° HOOK HOOK A OR G	135° HOOK APPROX. H
#4	2"	4-1/2"	4-1/2"	3"
#5	2-1/2"	6"	5-1/2"	3-3/4"
#6	4-1/2"	12"	8"	4-1/2"

NOTE: UNLESS OTHERWISE NOTED DIAMETER "D" IS THE SAME FOR ALL BENDS AND HOOKS ON A BAR.

DETAILING DIMENSION · 90° · 180° · HOOK A OR G · 4d OR 2-1/2" MIN.

TWO ADDITIONAL ARE INCLUDED IN THE BAR BILL FOR TESTING.

END HOOK DIMENSIONS					
BAR SIZE	D (IN.)	ALL GRADES 150° HOOKS A OR G	150° HOOKS J	90° HOOKS A OR G
#3	2-1/4"	5"	3"	6"
#4	3"	6"	4"	8"
#5	3-3/4"	7"	5"	10"
#6	4-1/2"	8"	6"	12"
#7	5-1/4"	10"	7"	14"
#8	6"	11"	8"	16"
#9	9-1/2"	15"	11-3/4"	19"
#10	10-3/4"	17"	13-1/4"	22"
#11	12"	19"	14-3/4"	2'-0"
#14	18-1/4"	2'-3"	21-3/4"	2'-7"

NOTE: THIS DRAWING IS NOT TO SCALE. FOLLOW DIMENSIONS.

NOTE:
ALL STANDARD HOOKS AND BENDS OTHER THAN 180 DEG. TO BE BENT WITH THE SAME PROCEDURE AS FOR 90 DEG. STD. HOOKS.
HOOKS AND BENDS SHALL BE IN ACCORDANCE WITH THE PROCEDURES AS SHOWN ON THIS SHEET.
E = EPOXY COATED REINFORCEMENT.
S = STIRRUP.
X = BAR IS INCLUDED IN SUBSTRUCTURE QUANTITIES.
V = BAR DIMENSIONS VARY IN EQUAL INCREMENTS BETWEEN DIMENSIONS SHOWN ON THIS LINE AND THE FOLLOWING LINE.
NO. EA. = NUMBER OF BARS OF EACH LENGTH.
NOMINAL LENGTHS ARE BASED ON OUT TO OUT DIMENSIONS SHOWN IN BENDING DIAGRAMS AND ARE LISTED FOR FABRICATORS USE. (NEAREST INCH)
ACTUAL LENGTHS ARE MEASURED ALONG CENTERLINE BAR TO THE NEAREST INCH.
PAYWEIGHTS ARE BASED ON ACTUAL LENGTHS.
FOUR ANGLE OR CHANNEL SPACERS ARE REQUIRED FOR EACH COLUMN SPIRAL. SPACERS ARE TO BE PLACED ON INSIDE OF SPIRALS. LENGTH AND WEIGHT OF COLUMN SPIRALS DO NOT INCLUDE SPLICES OR SPACERS.
REINFORCING STEEL (GRADE 60) = FY 60,000 PSI.

STD 90.8 REVISED OCT. 1991
MAY 1974

DETAILED AUG. 1993
CHECKED AUG. 1993

SHEET NO. 49 OF 51.

JACKSON COUNTY A-610R1

FINAL PLANS

STATE	PROJ. NO.	SHEET NO.
MO.	Job# J4I5807 F.A.I. - 435 - 1(25)	

BILL OF REINFORCING STEEL

NO. REQ'D.	MARK NO. SIZE MARK	LOCATION	EPOXY (E)	SHAPE NO.	STIRRUP (S)	SUBSTR. (X)	VARIES (V)	NO. EACH	B FT. IN.	C FT. IN.	D FT. IN.	E FT. IN.	F FT. IN.	H FT. IN.	K FT. IN.	NOMINAL LENGTH FT. IN.	ACTUAL LENGTH FT. IN.	WEIGHT LBS.
7	4U53	BEAM		13	S				2 9.375	2 10.000	3 5.625	2 9.000				12 7	12 4	58
2	4U54	BEAM		14	S				2 9.000	2 9.375	2 10.000			2 9.000	8.250	8 4	8 3	11
89	6U55	DIAPH.	E	19	S				2 1.000	4 1.000						6 2	6 0	802
4	5U56	DIAPH.	E	10	S					5 7.000	2 8.375					13 10	13 8	57
13	5U57	DIAPH.	E	10	S					5 5.000	2 9.000					13 7	13 5	182
41	5U58	DIAPH.	E	10	S					2 1.000	2 4.000					6 6	6 4	271
53	4U59	APP. HCH.		10	S					17.500	6.000					3 5	3 3	115
4	5V33	BEAM		20					4 11.000							4 11	4 11	21
14	6V34	WING		20			V	2	2 7.000							2 7	2 7	
		INCREMENT =							8 0.000							8 0	8 0	111
		10.875 INCH																
4	6V35	WING		20					8 10.000							8 10	8 10	53
22	6V36	WING		20			V	2	8 2.000							8 2	8 2	
		INCREMENT =							8 6.000							8 6	8 6	275
		0.375 INCH																
		END BT NO 5																
		(W.B.L.)																
6	6F2	WING BRACE		15					14.000	4 6.000	14.000	9.875	9.875	9.875	9.875	6 10	6 9	61
6	6F3	DIAPH.		19					4 3.000	2 7.000						6 10	6 8	60
4	6H115	DIAPH.	E	20					22 10.000							22 10	22 10	137
3	6H118	DIAPH.		20					11 0.000							11 0	11 0	50
3	6H119	DIAPH.		20					22 10.000							22 10	22 10	103
21	6H120	DIAPH & BEAM		20					14 5.000							14 5	14 5	455
1	4H123	APP. HCH.		20					21 8.000							21 8	21 8	14
4	6H129	DIAPH.	E	20					58 6.000							58 6	58 6	351
3	6H130	DIAPH.		20					44 0.000							44 0	44 0	198
3	6H131	DIAPH.		20					58 6.000							58 6	58 6	264
21	6H132	DIAPH & BEAM		20					17 3.000							17 3	17 3	544
2	4H133	APP. HCH.		20					29 0.000							29 0	29 0	39
2	6H134	WING	E	20					10 5.000							10 5	10 5	31
4	6H135	WING		20					10 5.000							10 5	10 5	63
16	6H136	WING		20			V	2	3 11.000							3 11	3 11	
		INCREMENT =							10 2.000							10 2	10 2	169
		10.750 INCH																
2	6T8	WING		25					2 1.000	9 5.000	3 1.750			6 1.000	7 2.250	14 8	14 7	44
12	5U49	BEAM		32	S				4 11.250	3 5.625	5 1.000			4 11.250	14.750	13 6	13 3	166
10	4U50	BEAM		13	S				2 8.875	3 0.125	3 5.625	2 11.000				12 11	12 7	84
11	5U52	BEAM		32	S				4 9.000	3 5.625	4 10.750			4 9.000	14.250	13 1	12 10	147
7	5U53	BEAM		13	S				2 9.375	2 10.000	3 5.625	2 9.000				12 9	12 5	91
2	4U54	BEAM		14	S				2 9.000	2 9.375	2 10.000			2 9.000	8.250	8 4	8 3	11
105	6U55	DIAPH.	E	19	S				2 1.000	4 1.000						6 2	6 0	946
28	5U57	DIAPH.	E	10	S					5 5.000	2 9.000					13 7	13 5	392
41	5U58	DIAPH.	E	10	S					2 1.000	2 4.000					6 6	6 4	271
66	4U59	APP. HCH.		10	S					17.500	6.000					3 5	3 3	143
4	5V33	BEAM		20					4 11.000							4 11	4 11	21
6	5V37	BEAM		20					5 1.000							5 1	5 1	32
14	6V38	WING		20			V	2	2 7.000							2 7	2 7	
		INCREMENT =							7 11.000							7 11	7 11	110
		10.625 INCH																
[illegible]	[illegible]	[illegible]		20												[illegible]	[illegible]	52

376

BILL OF REINFORCING STEEL

NO. REQ'D.	MARK NO. SIZE MARK	LOCATION	EPOXY (E)	SHAPE NO.	STIRRUP (S)	SUBSTR. (X)	VARIES (V)	NO. EACH	B FT. IN.	C FT. IN.	D FT. IN.	E FT. IN.	F FT. IN.	H FT. IN.	K FT. IN.	NOMINAL LENGTH FT. IN.	ACTUAL LENGTH FT. IN.	WEIGHT LBS.
144	5C1	BARRIER CURB	E	20					8 10.000							8 10	8 10	1327
4	5C2	BARRIER CURB	E	20					9 4.000							9 4	9 4	39
2	5C3	BARRIER CURB	E	20					6 3.000							6 3	6 3	13
2	5C4	BARRIER CURB	E	20					10 8.000							10 8	10 8	22
2	5C5	BARRIER CURB	E	20					12 8.000							12 8	12 8	26
2250	5R1	BARRIER CURB	E	19	S				2 6.000	3.500						2 10	2 8	6258
2194	5R2	BARRIER CURB	E	15	S				2 6.125	3.500				2 6.000	3.125	2 10	2 9	6293
1054	5R3	BARRIER CURB	E	19	S				17.000	6.000						23	22	2015
1054	5R4	BARRIER CURB	E	27	S					6.000	11.000	7.000	12.000	9.000	6.250	3 0	2 10	3115
26	5R5	BARRIER CURB	E	19	S				18.500	6.000						2 1	23	52
26	5R6	BARRIER CURB	E	27	S				12.000	9.750	10.625	6.000		6.125	8.750	3 2	3 0	81
4	5R7	BARRIER CURB	E	19	S				16.000	6.000						22	21	7
4	5R8	BARRIER CURB	E	27	S				12.000	9.750	7.750	6.000		4.625	6.250	3 0	2 10	12
12	5R9	BARRIER CURB	E	10	S					2 8.500	7.500					6 1	5 10	73
48	5R10	BARRIER CURB	E	20					5 0.000							5 0	5 0	250
8	5R11	BARRIER CURB	E	19	S				2 3.500	3.500						2 7	2 6	21
10	5R12	BARRIER CURB	E	20					8 5.000							8 6	8 6	89
2	5R13	BARRIER CURB	E	20					9 5.000							9 5	9 5	20
2	5R14	BARRIER CURB	E	20					11 3.000							11 3	11 3	23
26	5R15	BARRIER CURB	E	19	S				2 2.500	6.000						2 9	2 7	70
26	5R16	BARRIER CURB	E	27	S					6.000	11.000	17.750		9.000	6.250	2 11	2 10	77
4	5R17	BARRIER CURB	E	27	S					6.000	7.750	17.750		6.250	4.625	2 8	2 7	11
4	5R18	BARRIER CURB	E	19	S				2 0.000	6.000						2 6	2 5	10
12	5R19	BARRIER CURB	E	10	S					2 0.000	7.500					4 8	4 5	55
10	5R20	BARRIER CURB	E	20					9 0.000							9 0	9 0	94
2	5R21	BARRIER CURB	E	20					9 10.000							9 10	9 10	21
84	5R22	BARRIER CURB	E	20					35 1.000							35 1	35 1	3074
282	5R23	BARRIER CURB	E	20					9 9.000							9 9	9 9	2868
168	5R24	BARRIER CURB	E	20					35 11.000							35 11	35 11	6293
63	5R25	BARRIER CURB	E	20					34 6.000							34 6	34 6	2267
7	5R26	BARRIER CURB	E	20					5 9.000							5 9	5 9	42
7	5R27	BARRIER CURB	E	20					12 5.000							12 5	12 5	91
7	5R28	BARRIER CURB	E	20					10 5.000							10 5	10 5	76
21	5R29	BARRIER CURB	E	20					35 6.000							35 6	35 6	778
		CAST-IN-																
		PLACE																
		CONVENTIONAL																
		FORMS OR																
		STAY-IN-																
		PLACE FORMS																
2466	6S1	SLAB	E	20					22 5.000							22 5	22 5	8 3030
1233	6S2	SLAB	E	20					34 7.000							34 7	34 7	6 4047
1959	6S3	SLAB	E	20					26 6.000							26 6	26 6	7 7971
1959	6S4	SLAB	E	20					46 6.000							46 6	46 6	13 6822
1638	5S5	SLAB	E	20					39 0.000							39 0	39 0	6 6629
460	6S6	SLAB	E	20					60 0.000							60 0	60 0	4 1453
462	S7	SLAB	E	20					13 4.000							13 4	13 4	9252
230	6S8	SLAB	E	20					60 0.000							60 0	60 0	2 0728
230	6S9	SLAB	E	20					20 1.000							20 1	20 1	6938
2016	6S10	SLAB	E	20					38 9.000							38 9	38 9	11 7336
1452	6S11	SLAB	E	20					21 10.000							21 10	21 10	4 7616
726	6S12	SLAB	E	20					34 0.000							34 0	34 0	3 7075
4344	4S13	SLAB HAUNCH	E	10					6.000	7.000	7.000	6.000				2 9	2 5	7011 ⚠

TWO ADDITIONAL #5-R23 & #6-S7 ARE INCLUDED IN THE BAR BILL FOR TESTING.

STIRRUP HOOK DIMENSIONS				
GRADES 40 - 50 - 60 KSI				
BAR SIZE	D (IN.)	90° HOOK HOOK A OR G	135° HOOK HOOK A OR G	135° HOOK APPROX. H
#4	2"	4-1/2"	4-1/2"	3"
#5	2-1/2"	6"	5-1/2"	3-3/4"
#6	4-1/2"	12"	8"	4-1/2"

NOTE: UNLESS OTHERWISE NOTED DIAMETER "D" IS THE SAME FOR ALL BENDS AND HOOKS ON A BAR.

END HOOK DIMENSIONS				
		ALL GRADES		
BAR SIZE	D (IN.)	180° HOOKS A OR G	180° HOOKS J	90° HOOKS A OR G
#3	2-1/4"	5"	3"	6"
#4	3"	6"	4"	8"
#5	3-3/4"	7"	5"	10"
#6	4-1/2"	8"	6"	12"
#7	5-1/4"	10"	7"	14"
#8	6"	11"	8"	16"
#9	9-1/2"	15"	11-3/4"	19"
#10	10-3/4"	17"	13-1/4"	22"
#11	12"	19"	14-3/4"	2'-0"
#14	18-1/4"	2'-3"	21-3/4"	2'-7"

NOTE:
ALL STANDARD HOOKS AND BENDS OTHER THAN 180 DEG. TO BE BENT WITH THE SAME PROCEDURE AS FOR 90 DEG. STD. HOOKS.
HOOKS AND BENDS SHALL BE IN ACCORDANCE WITH THE PROCEDURES AS SHOWN ON THIS SHEET.
E = EPOXY COATED REINFORCEMENT.
S = STIRRUP.
X = BAR IS INCLUDED IN SUBSTRUCTURE QUANTITIES.
V = BAR DIMENSIONS VARY IN EQUAL INCREMENTS BETWEEN DIMENSIONS SHOWN ON THIS LINE AND THE FOLLOWING LINE.
NO. EA. = NUMBER OF BARS OF EACH LENGTH.
NOMINAL LENGTHS ARE BASED ON OUT TO OUT DIMENSIONS SHOWN IN BENDING DIAGRAMS AND ARE LISTED FOR FABRICATORS USE. (NEAREST INCH)
ACTUAL LENGTHS ARE MEASURED ALONG CENTERLINE BAR TO THE NEAREST INCH.
PAYWEIGHTS ARE BASED ON ACTUAL LENGTHS.
FOUR ANGLE OR CHANNEL SPACERS ARE REQUIRED FOR EACH COLUMN SPIRAL. SPACERS ARE TO BE PLACED ON INSIDE OF SPIRALS. LENGTH AND WEIGHT OF COLUMN SPIRALS DO NOT INCLUDE SPLICES OR SPACERS.
REINFORCING STEEL (GRADE 60) = FY 60,000 PSI.

BENDING DIAGRAMS

⚠ Revised 5/26/94

STD 90.8 | MAY 1974 | REVISED OCT. 1991

DETAILED AUG. 1993
CHECKED AUG. 1993

NOTE: THIS DRAWING IS NOT TO SCALE. FOLLOW DIMENSIONS.

SHEET NO. 50 OF 51.

JACKSON COUNTY

A-610R1

STATE	PROJ. NO. Job # J4I0847	SHEET NO.
MO.	F.A.I.-435-1(25I)	348

FINAL PLANS

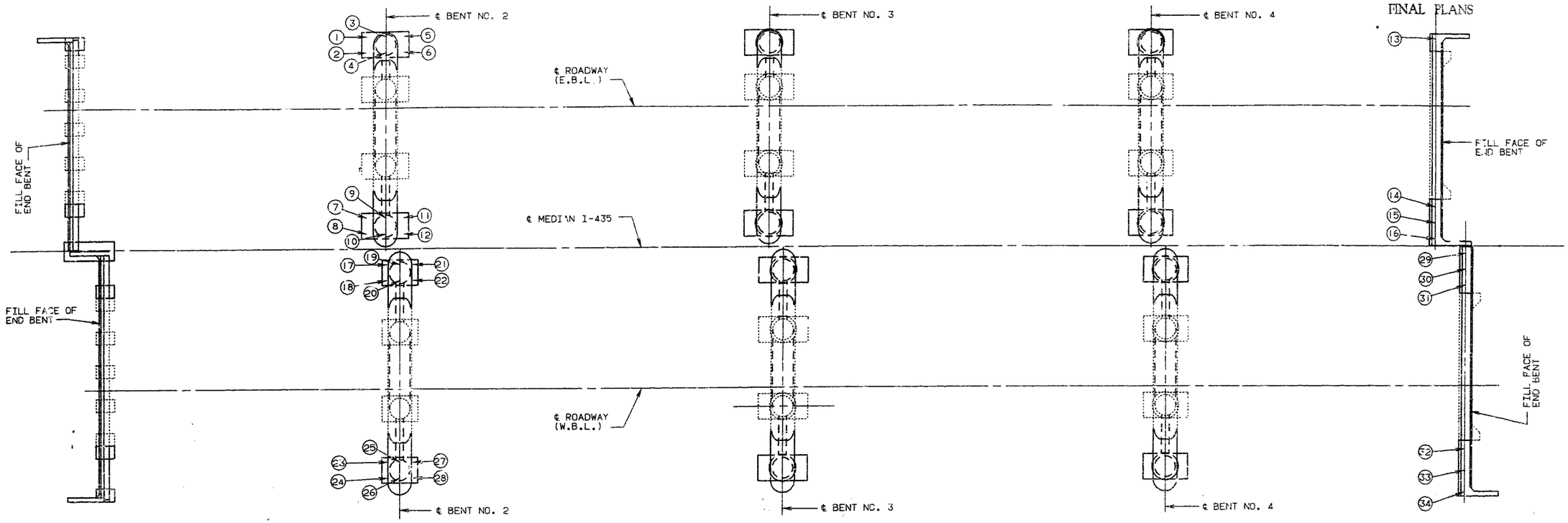

PART PLAN SHOWING
PILE NUMBERING FOR RECORDING
"AS BUILT PILE" DATA

"AS BUILT PILE" DATA

PILE NO.	LENGTH IN PLACE (FT.)	COMPUTED BEARING (TONS)	Pre-Bore	Pile Point Reinf.	REMARKS
					INT. BENT NO. 2 (E.B.L.)
1	24'	132.8	13'	–	HP 12×53 All pile driven to practical refusal
2	24'	161.3	13'	–	" "
3	24'	157.3	13'	–	" "
4	24'	196.7	13'	–	" "
5	24'	141.1	13'	–	" "
6	24'	141.1	13'	–	" "
7	19'	150.5	13'	–	" "
8	19'	188.2	13'	–	" "
9	19'	168.6	13'	–	" "
10	20'	147.5	13'	–	" "
11	22'	141.1	13'	–	" "
12	22'	161.3	13'	–	" "
	265'	Subtotal	156'	–	

"AS BUILT PILE" DATA

PILE NO.	LENGTH IN PLACE (FT.)	COMPUTED BEARING (TONS)	Pre-Bore	Pile Point Reinf.	REMARKS
					END BENT NO. 5 (E.B.L.)
13	66'	118.0	–	1'	HP 10×42 All pile driven to practical refusal.
14	65'	115.3	–	1'	" "
15	66'	115.8	–	1'	" "
16	66'	115.8	–	1'	" "
	263'	Subtotal	–	4'	INT. Bent No. 2. (W.B.L.)
17	17'	141.1	11.5'	–	HP 12×53 All pile driven to practical refusal.
18	16'	161.3	11.5'	–	" "
19	17'	168.6	11.5'	–	" "
20	16'	147.5	11.5'	–	" "
21	21'	141.1	11.5'	–	" "
22	18'	141.1	11.5'	–	" "
23	17'	161.3	11.5'	–	" "
24	16'	188.2	11.5'	–	" "
25	16'	196.7	11.5'	–	" "
26	16'	147.5	11.5'	–	" "

"AS BUILT PILE" DATA

PILE NO.	LENGTH IN PLACE (FT.)	COMPUTED BEARING (TONS)	Pre-Bore	Pile Point Reinf.	REMARKS
27	17'	141.1	11.5'	–	HP 12×53 All pile driven to practical refusal
28	17'	141.1	11.5'	–	" "
	204'	Subtotal	138'		END BENT NO. 5 (W.B.L.)
29	65'	115.8	–	1'	HP 10×42 All pile driven to practical refusal
30	65'	110.8	–	1'	" "
31	65'	106.2	–	1'	" "
32	15'	118.0	–	1'	" "
33	65'	107.3	–	1'	" "
34	64'	107.3	–	1'	" "
	389'	subtotal	–	6'	
	263'	subtotal	–	4'	
	652'	Total		10'	10×42
	265'	subtotal	156'	–	
	204'	subtotal	138'	–	
	469'	Total	294'		12×53

NOTE: INDICATE IN REMARK COLUMN:
A.) IF PILING WERE DRIVEN TO PRACTICAL REFUSAL.
B.) PILE BATTER IF OTHER THAN SHOWN ON BENT DETAIL SHEET.
C.) TYPE OF PILING USED.

~~NOTE: THIS SHEET TO BE COMPLETED BY MHTD CONSTRUCTION PERSONNEL.~~

MISC. PILES IN PLACE REVISED: MAY 1992

DETAILED AUG. 1993
CHECKED AUG. 1993

NOTE: THIS DRAWING IS NOT TO SCALE. FOLLOW DIMENSIONS.

SHEET NO. 51 OF 51. JACKSON COUNTY A-610R1